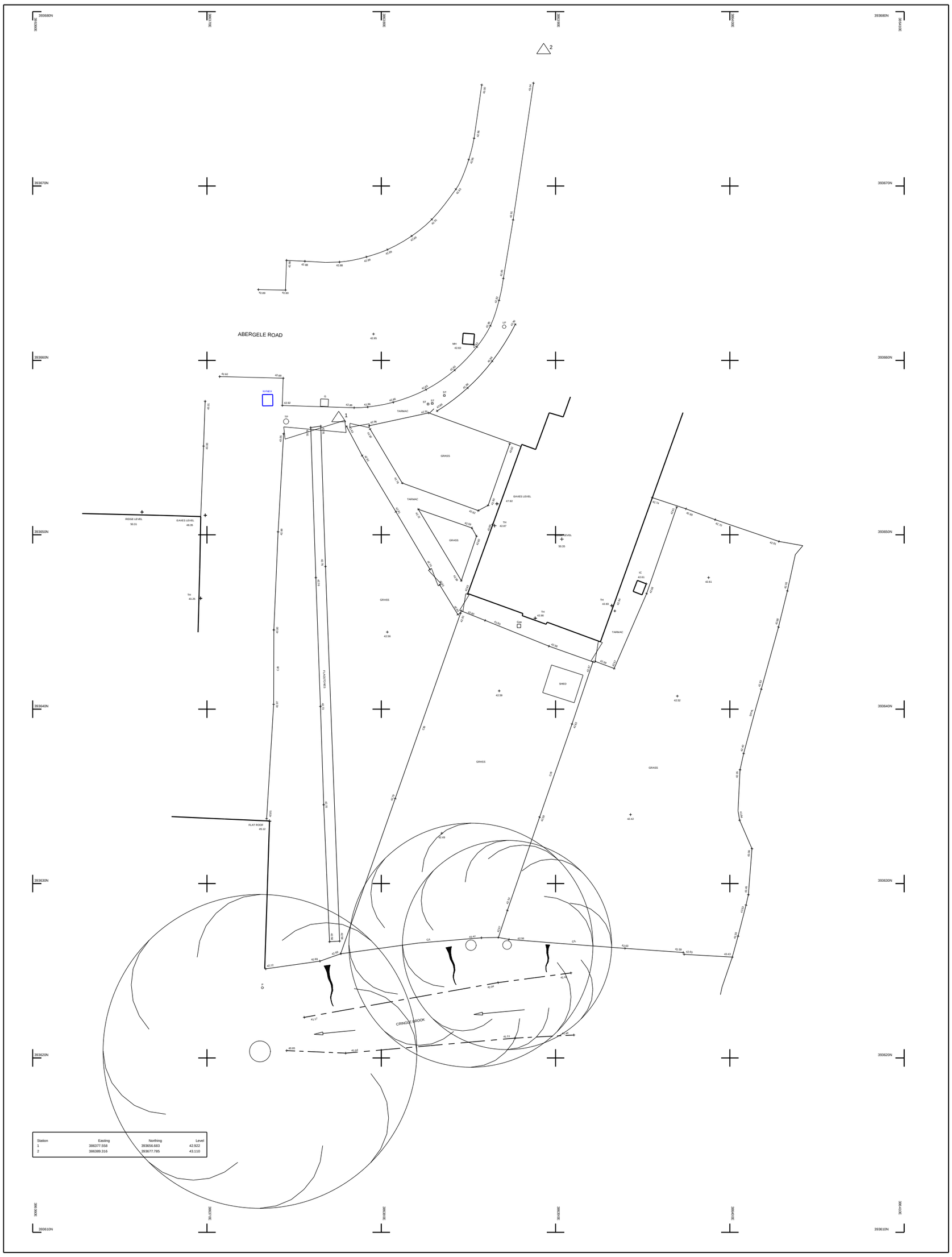

Notes

Do not scale from this drawing.

All dimensions must be checked on site by contractor prior to construction.

Bernard Taylor Partnership Ltd.
Architects

ELIZABETH HOUSE, 486 DIDSBURY ROAD, HEATON MERSEY,
STOCKPORT, CHESHIRE, SK4 3BS.
Tel: 0161-443 1221
Fax: 0161-442 1672
E-mail: Info@BernardTaylor.co.uk

Client

Southway Housing Trust

Job

Abergele Road,
Manchester

Description

Existing
Site plan

Drawn: AG Date: 24.07.12 Scale: 1:200

Job No:	Drg No:	Rev.
2524b	**101**	**-**