KEY

1 Location of Triax TD64 satellite, Metronet Data dish and conduit/cable run. Refer to Drawing No. 1253-ISA-DR-G530-D-STDISH2. Detail C, D and E.

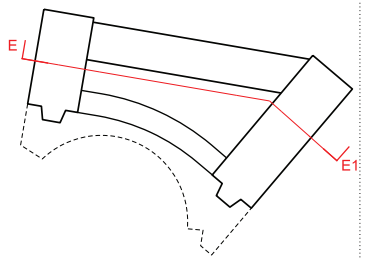

KEY PLAN: N.T.S



IAN SIMPSON ARCHITECTS LIMITED

Note:
This drawing is copyright
Do not scale off dimensions.
All dimensions to be checked on site by contractor.
Contractor to report any dimensional discrepancies, errors or omissions prior to commencing on site.
All survey information relating to the THX plans has been taken from Oakes Survey Drawings.
All survey information relating to external levels and elevations have been taken from IDS Drawings.

Rev	Date	Description	Rev	Date	Description	Rev	Date	Description

North

Project Title: Manchester Townhall Complex Transformation Project
Townhall Extension

Drawing Title: Proposed Section EE1

Reason For Issue: Planning

Scale: 1:400 @A3 1:200 @ A1

Date: 19 Feb 2013

Job No: 1253

Drawing No: 1253-ISA-DR-G200-S-EE1

Revision: -

IAN SIMPSON ARCHITECTS
Riverside, 4 Commercial Street, Manchester, M15 4RQ
T +44 (0)161 835 2565 F +44 (0)161 839 4888
5 - 8 Roberts Place, London EC1R 0BB
T +44 (0)20 7549 4000 F +44 (0)20 7490 5331
mail@iansimpsonarchitects.com

© Ian simpson architects ltd 2008

KEY

1 Location of Triax TD64 satellite, Metronet Data dish and conduit/cable run. Refer to Drawing No. 1253-ISA-DR-G530-D-STDISH2. Detail C, D and E.

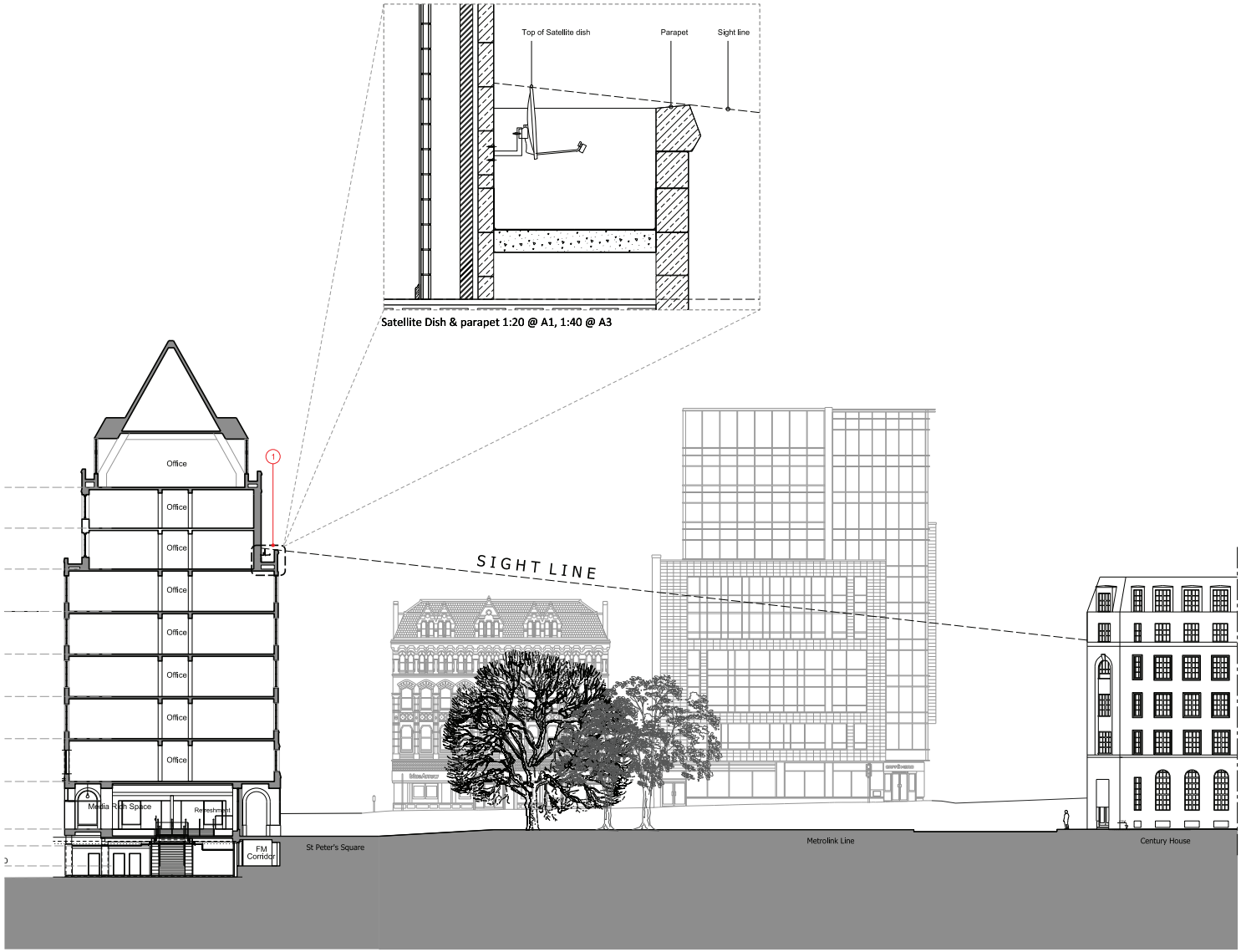

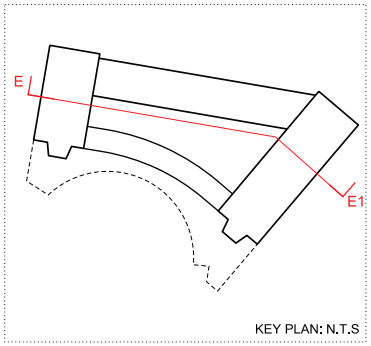

IAN SIMPSON ARCHITECTS LIMITED

Note:
This drawing is copyright
Do not scale off dimensions.
All dimensions to be checked on site by contractor.
Contractor to report any dimensional discrepancies, errors or omissions prior to commencing on site.
All survey information relating to the THX plans has been taken from Oakes Survey Drawings.
All survey information relating to external levels and elevations have been taken from IDS Drawings.

Rev	Date	Description	Rev	Date	Description	Rev	Date	Description

North

Project Title: Manchester Townhall Complex Transformation Project
Townhall Extension

Drawing Title: Proposed Section EE1 with context

Reason For Issue: Planning

Scale: 1:400 @A3 1:200 @ A1

Date: 19 Feb 2013

Job No: 1253

Drawing No: 1253-ISA-DR-G200-S-EE1CXT

Revision: -

IAN SIMPSON ARCHITECTS
Riverside, 4 Commercial Street, Manchester, M15 4RQ
T +44 (0)161 835 2545 F +44 (0)161 839 4888
5 - 8 Roberts Place, London EC1R 0BB
T +44 (0)20 7549 4000 F +44 (0)20 7490 5331
mail@iansimpsonarchitects.com

© Ian simpson architects ltd 2008

Detail A

Refer to drawing no. 1253-ISA-DR-G530-D-STDISH2 for sectional details EE, EE1, EE2.

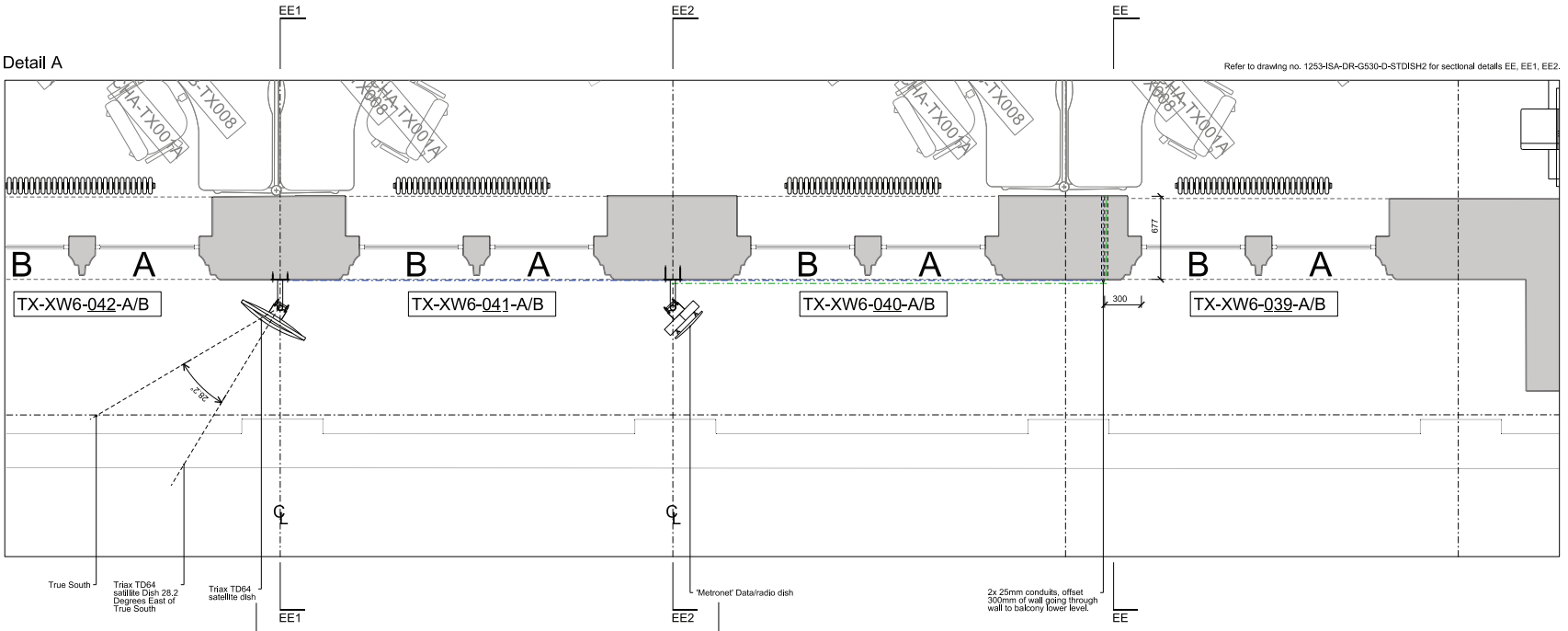



Triax TD64 Satellite dish



'Metronet' Data Dish

Detail B

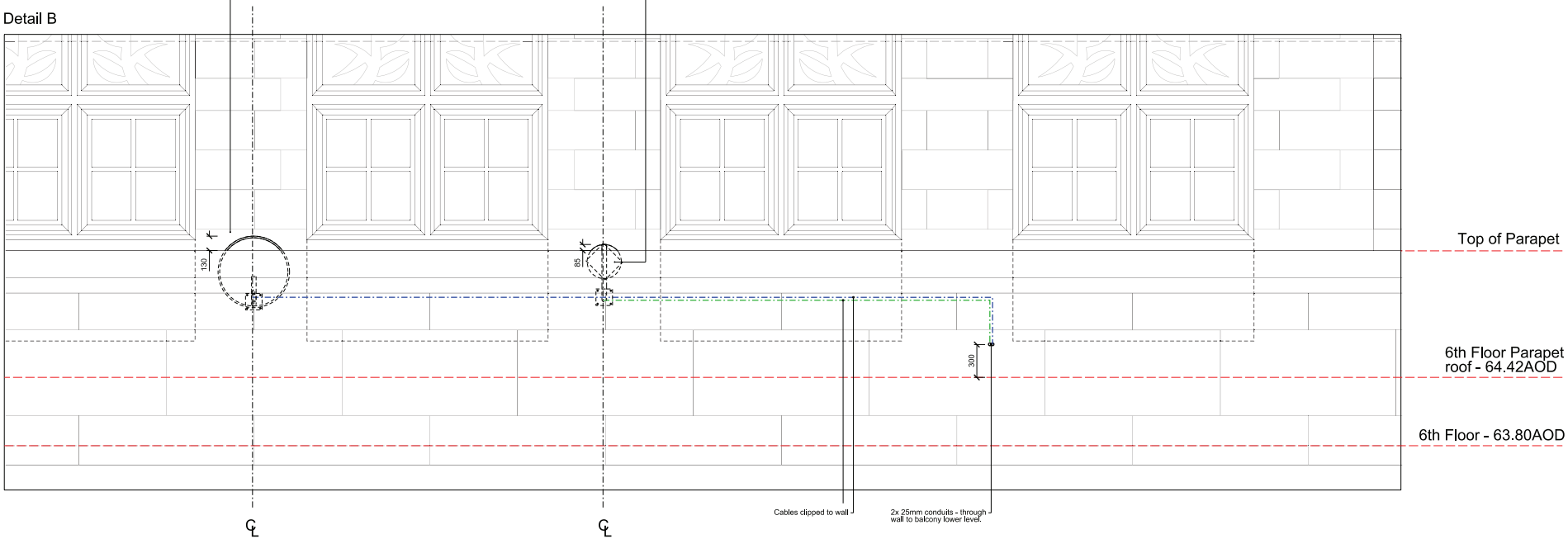

IAN SIMPSON ARCHITECTS LIMITED

Note:
This drawing is copyright
Do not scale off dimensions.
All dimensions to be checked on site by contractor.
Contractor to report any dimensional discrepancies, errors or omissions prior to commencing on site.
All survey information relating to the THX plans has been taken from Oakes Survey Drawings.
All survey information relating to external levels and elevations have been taken from IDS Drawings.

Rev	Date	Description	Rev	Date	Description	Rev	Date	Description

North

Project Title: Manchester Townhall Complex Transformation Project
Townhall Extension

Drawing Title: Satellite and Data Dish Installation

Reason For Issue: Planning

Scale: 1:40 @ A3 1:20 @ A1

Date: 19 Feb 2013

Job No: 1253

Drawing No: 1253-ISA-DR-G530-D-STDISH1

Revision: -

IAN SIMPSON ARCHITECTS
Riverside, 4 Commercial Street, Manchester, M15 4RQ
T +44 (0)161 835 2565 F +44 (0)161 839 4688
5 - 8 Roberts Place, London EC1R 0BB
T +44 (0)20 7549 4000 F +44 (0)20 7490 5331
mail@iansimpsonarchitects.com

© Ian Simpson architects ltd 2008

Section EE1 - Detail C, Triax TD64 Satellite dish

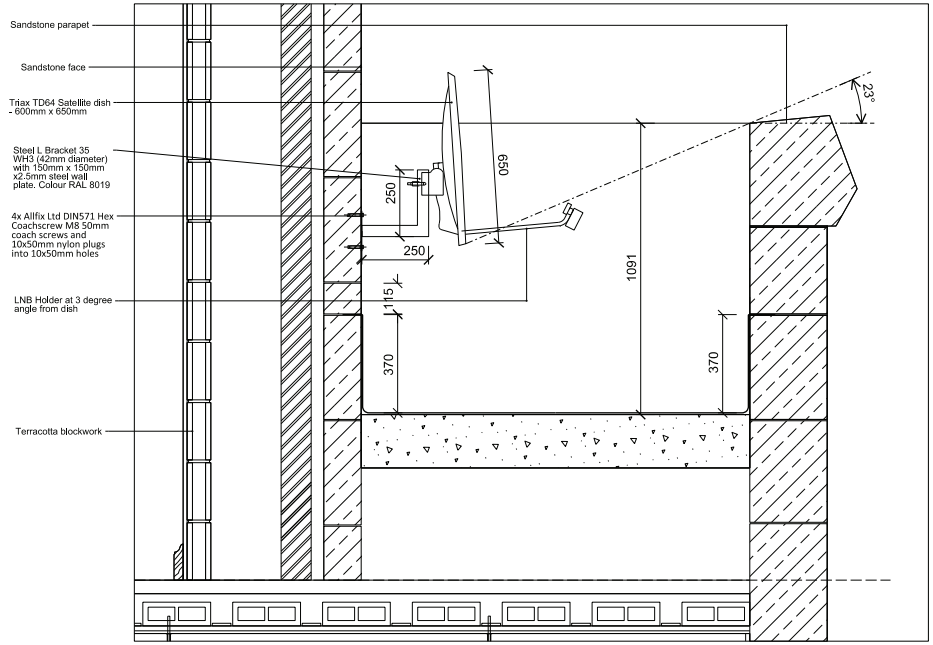

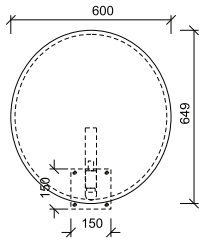

Triax TD64 dimensions

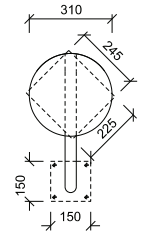

Metronet data dish dimensions

Section EE2 - Detail D

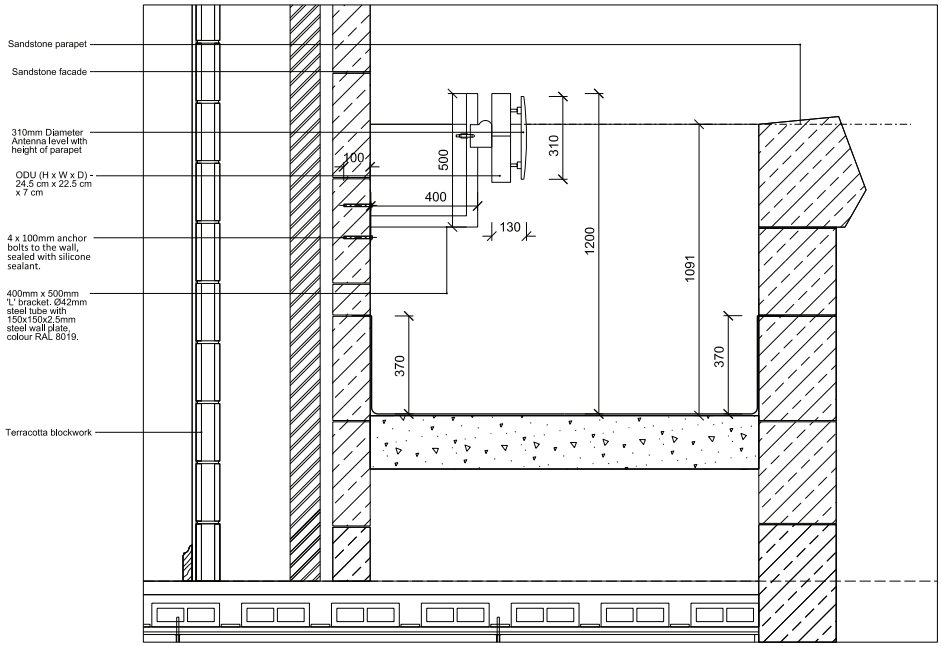

Detail E - Conduit/Cable Run

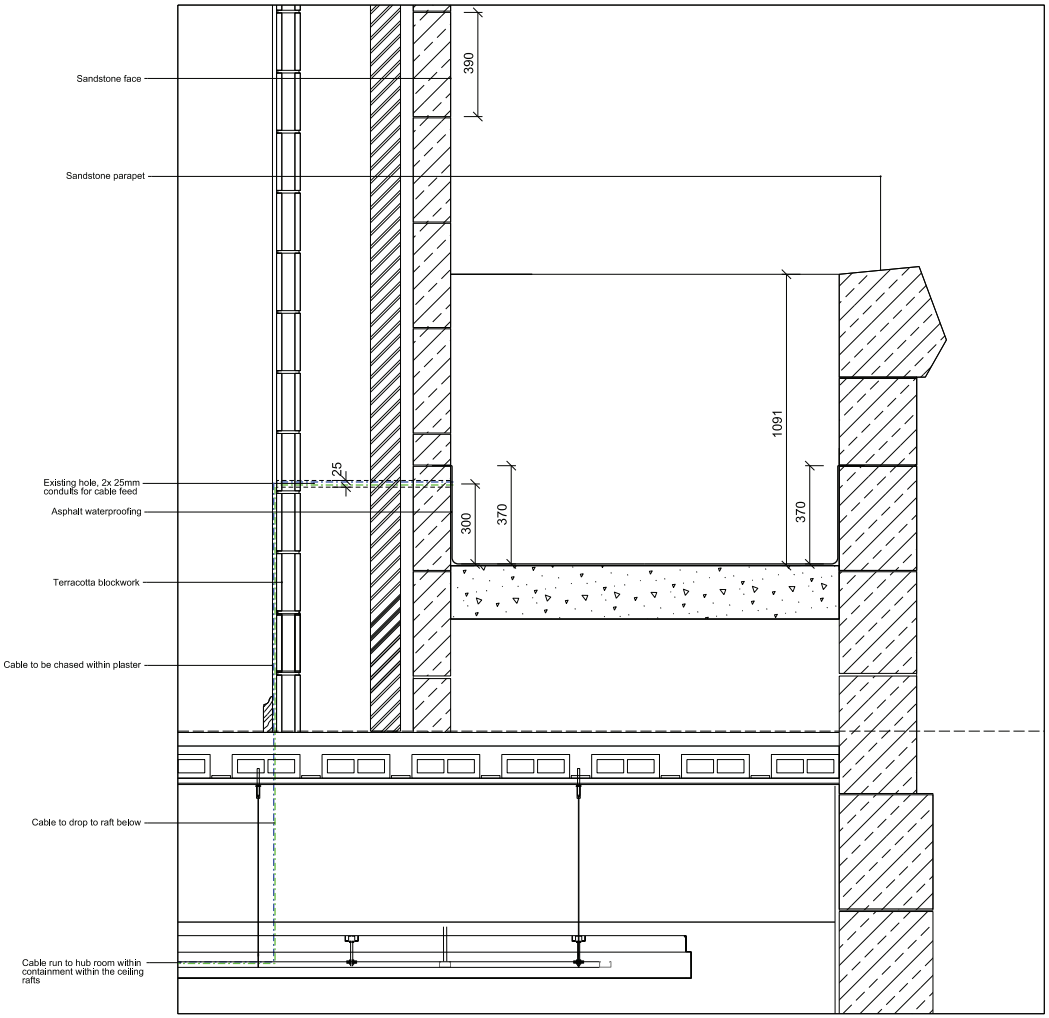

IAN SIMPSON ARCHITECTS LIMITED

Note:
This drawing is copyright
Do not scale off dimensions.
All dimensions to be checked on site by contractor.
Contractor to report any dimensional discrepancies, errors or omissions prior to commencing on site.
All survey information relating to the THX plans has been taken from Oakes Survey Drawings.
All survey information relating to external levels and elevations have been taken from IDS Drawings.

Rev	Date	Description	Rev	Date	Description	Rev	Date	Description

North

Project Title: Manchester Townhall Complex Transformation Project
Townhall Extension

Drawing Title: Satellite and Data Dish Installation

Reason For Issue: Planning

Scale: 1:20 @ A3 1:10 @ A1

Date: 19 Feb 2013

Job No: 1253

Drawing No: 1253-ISA-DR-G530-D-STDISH2

Revision: -

IAN SIMPSON ARCHITECTS
Riverside, 4 Commercial Street, Manchester, M15 4RQ
T +44 (0)161 835 2545 F +44 (0)161 839 4698
5 - 8 Roberts Place, London EC1R 0BB
T +44 (0)20 7549 4000 F +44 (0)20 7490 5331
mail@iansimpsonarchitects.com

© Ian Simpson architects ltd 2008

Option 1 - Attachment to the stonewall via an 'L' Bracket.

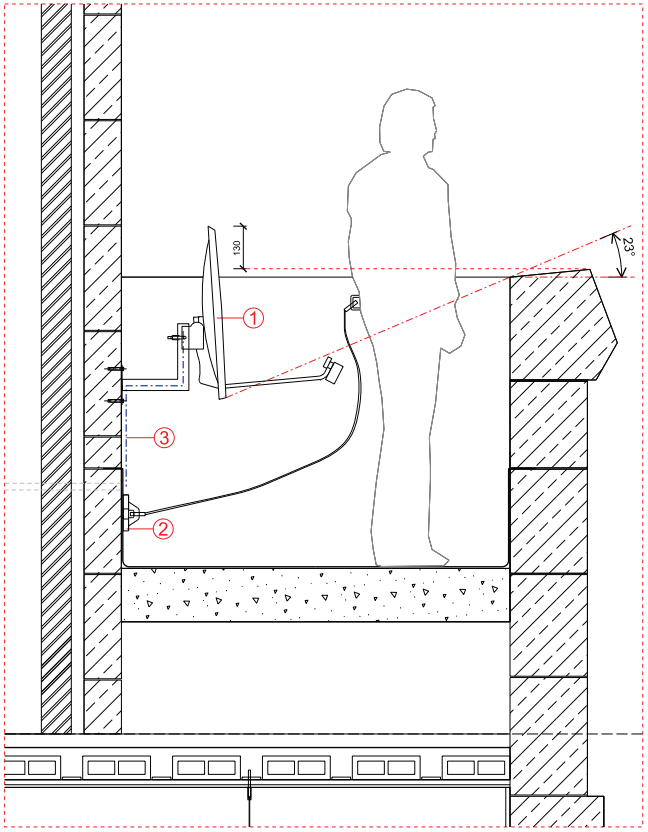

Option 2 - Attachment to the floor of the balcony via a vertical bracket.

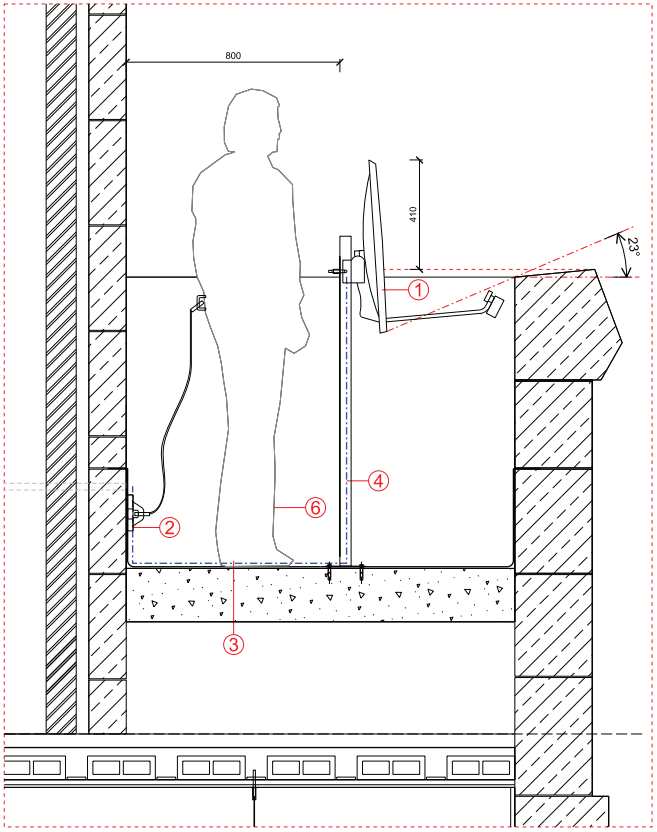

Option 3 - Free standing dish, attached to a concrete base via a vertical bracket.

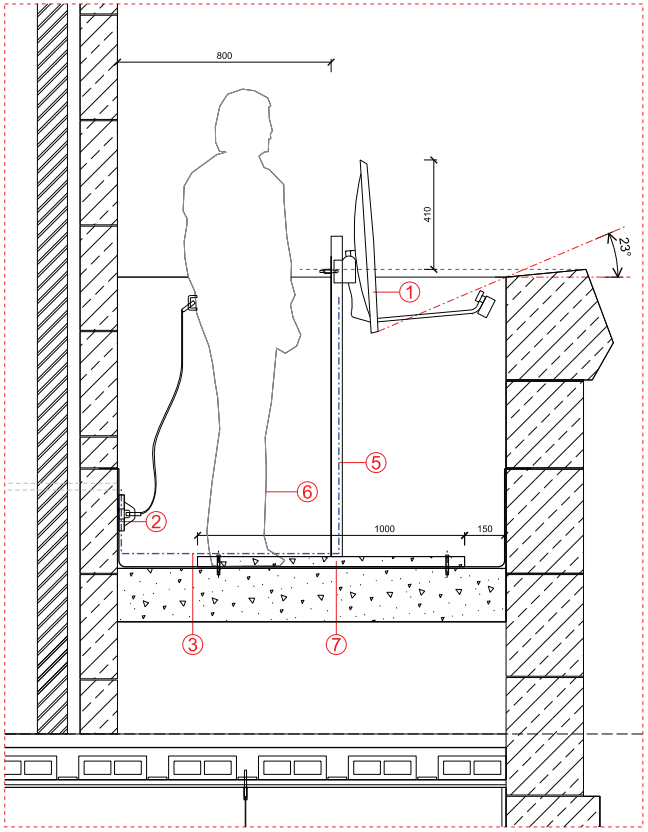

KEY:

1. Triax TD64 Satellite dish
2. Mansafe system. Fixing TBC
3. Cable route subject to damage
4. Vertical bracket attached to floor
5. Free standing dish, attached to concrete base via a vertical bracket
6. Installed mansafe system obstructed by base and position of bracket.
7. Concrete base

IAN SIMPSON ARCHITECTS LIMITED

Note:
This drawing is copyright
Do not scale off dimensions.
All dimensions to be checked on site by contractor.
Contractor to report any dimensional discrepancies, errors or omissions prior to commencing on site.
All survey information relating to the THX plans has been taken from Oakes Survey Drawings.
All survey information relating to external levels and elevations have been taken from IDS Drawings.

Rev	Date	Description	Rev	Date	Description	Rev	Date	Description

North

Project Title: Manchester Townhall Complex Transformation Project
Townhall Extension

Drawing Title: Satellite dish options appraisal

Reason For Issue: For Discussion

Scale: 1:10 @ A1

Date: 4 MAR 2013

Job No: 1253

Drawing No: 1253-ISA-SK-G530-020

Revision: -

IAN SIMPSON ARCHITECTS
Riverside, 4 Commercial Street, Manchester, M15 4RQ
T +44 (0)161 835 2545 F +44 (0)161 839 4688
5 - 8 Roberts Place, London EC1R 0BB
T +44 (0)20 7549 4000 F +44 (0)20 7490 5331
mail@iansimpsonarchitects.com

© Ian simpson architects ltd 2008