This drawing is the property of Technical Signs and must not be reproduced in part or in full without prior consent of Technical Signs.

Existing



Exposed 18mm dia brilliant blue argon tubing

Position of Menu

Front Elevation
Scale 1:100

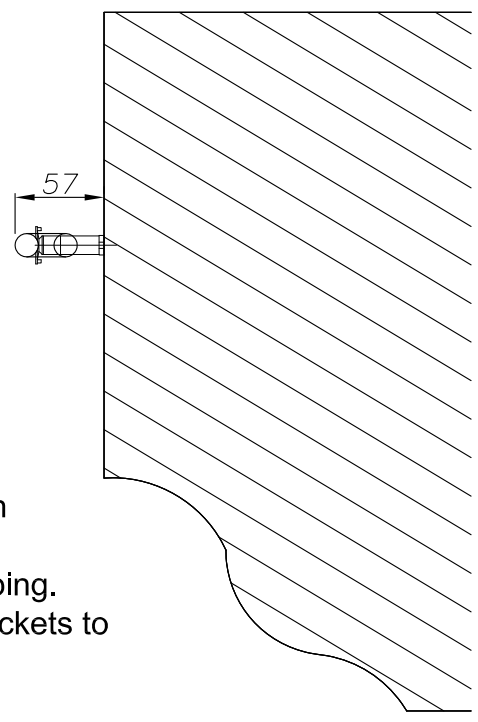

Section B-B through neon
Scale 1:5
15mm blue T14 argon tubing.
Fixed on acrylic neon brackets to the brickwork.

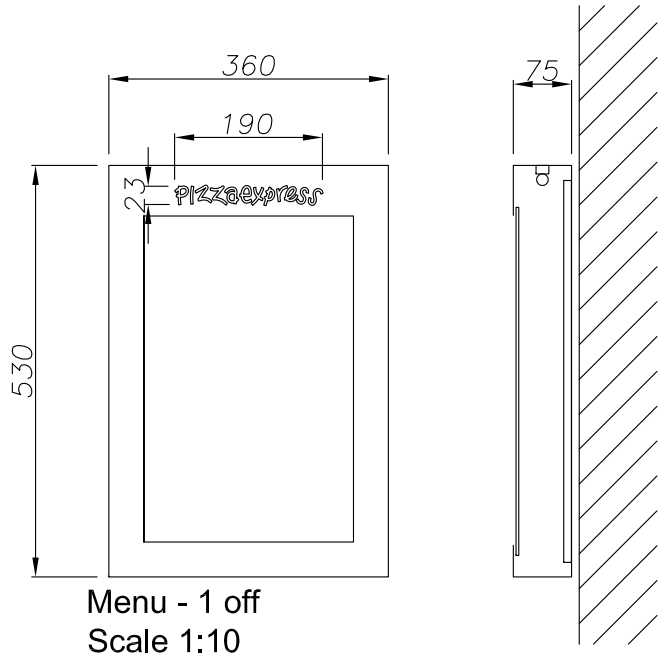

Menu - 1 off
Scale 1:10
Box manufactured from satin stainless steel.
Fret cut text backed up with translucent acrylic.
Internally illuminated via T8 coolwhite fluorescent tubes.
Continuous steel hinge and slam lock.
Acrylic insert and pinboard.
Screw fixed to the wall.

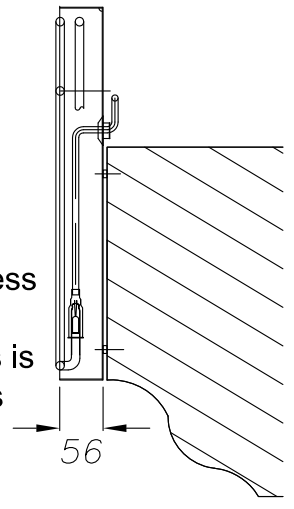

Section A-A through text
Scale 1:10
Built up trough style text has satin stainless steel returns.
Inside of the troughs is finished blue and it's fitted with exposed brilliant blue argon glass.
Letters fix to the stone ledge.

Technical Signs
Floor 1 - Unit 3
Hille Business Centre
132 St Albans Road
Watford, Herts, WD2 4AE
Tel: 01923 811999
Fax: 01923 811998
E-mail: info@technicalsigns.co.uk

Client	Pizza Express
Address/Job details	95 Lapwing Lane West Didsbury Lancashire TOwn County Planning
Job No	
Drawn by	JGB
Date	08/22/13
Scale	As specified (A3)
Drawing No	382495-1
Rev	