Sign Type H1 - ATM header panel detail

Scale 1:5 @ A3

Injection moulded acrylic panels, reverse decorated with red / white image.

Logo height: 90mm
Logo & Text span: 525mm

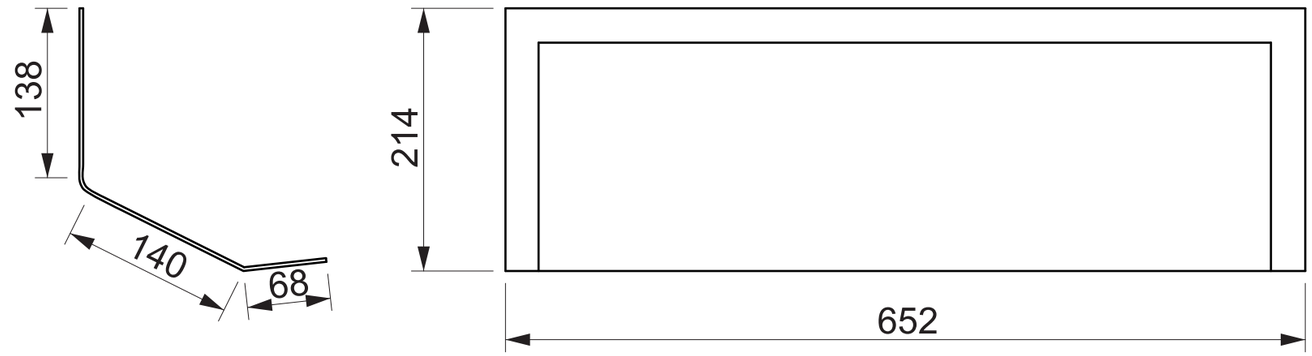

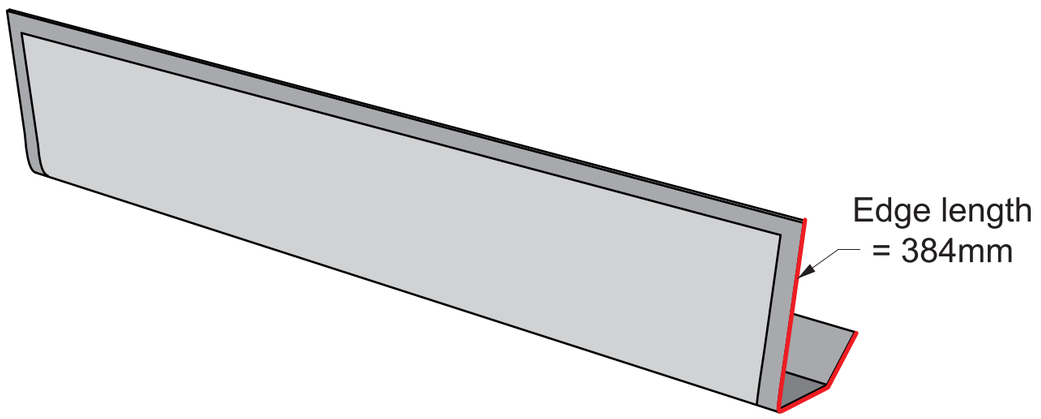



Scale bar: 1:5 @ A3

0mm — 1000mm