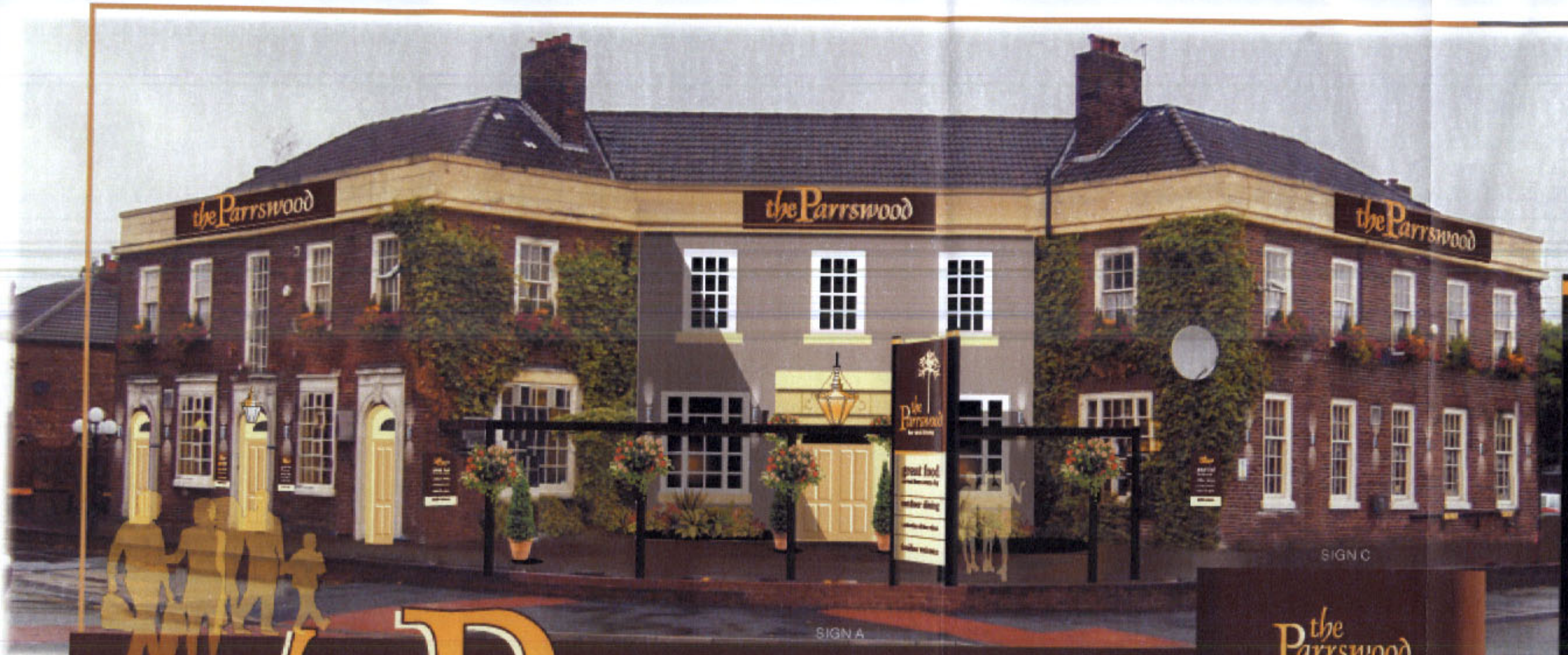

SIGN B



SIGN C



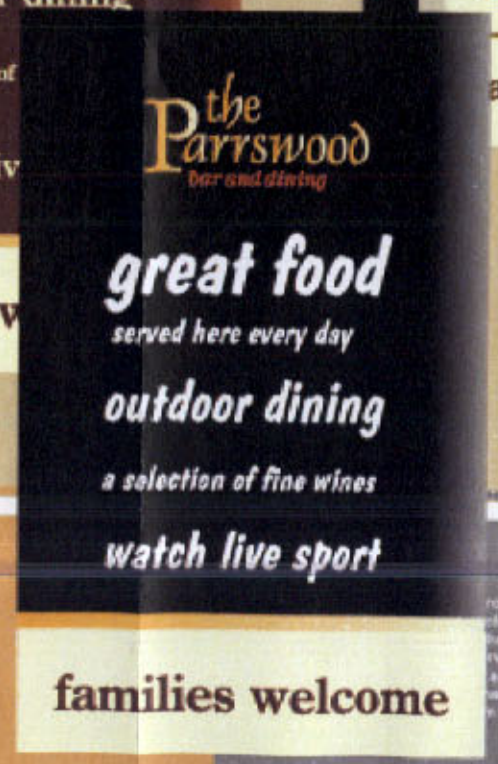

SIGN D

the Parrswood

Sign A - 3No new fascias having individual gilded letters illuminated by trough light

Sign B - One new double legged sign illuminated by 2No ground fixed flood lights in protective cages.

Sign C - Two new rolled edge amenity boards

Sign D - Two new rolled edge amenity boards

Sign E - One new lantern fitted over side door

Sign F - One new lantern fitted over main entrance

Sign G - 15No up & down lights

SIGN E

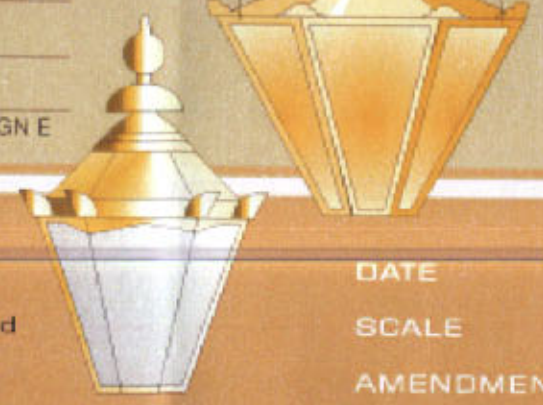

SIGN F

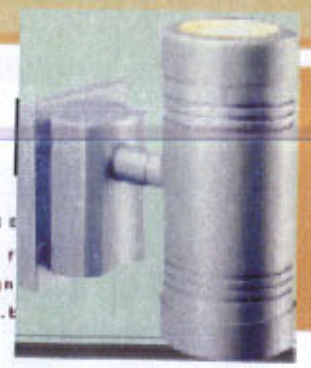

Sign G

insig
SIGNS AND SERVICE
t: 0113 243 8533
email: sales@insign
www.insigniasigns.

CUSTOMER	TCG	DATE	10/11/06
TITLE	Parrs Wood	SCALE	nts
ADDRESS	Didsbury	AMENDMENTS	15 11 06 18 11 06

roperty of Insignia Signs who own the
nformation in this document is given in
he written permission of Insignia Signs.
rwise the document must not be copied
any material form either wholly or in part
e document or any method or technique
n be disclosed to any third party.

SIGN A



SIGN B

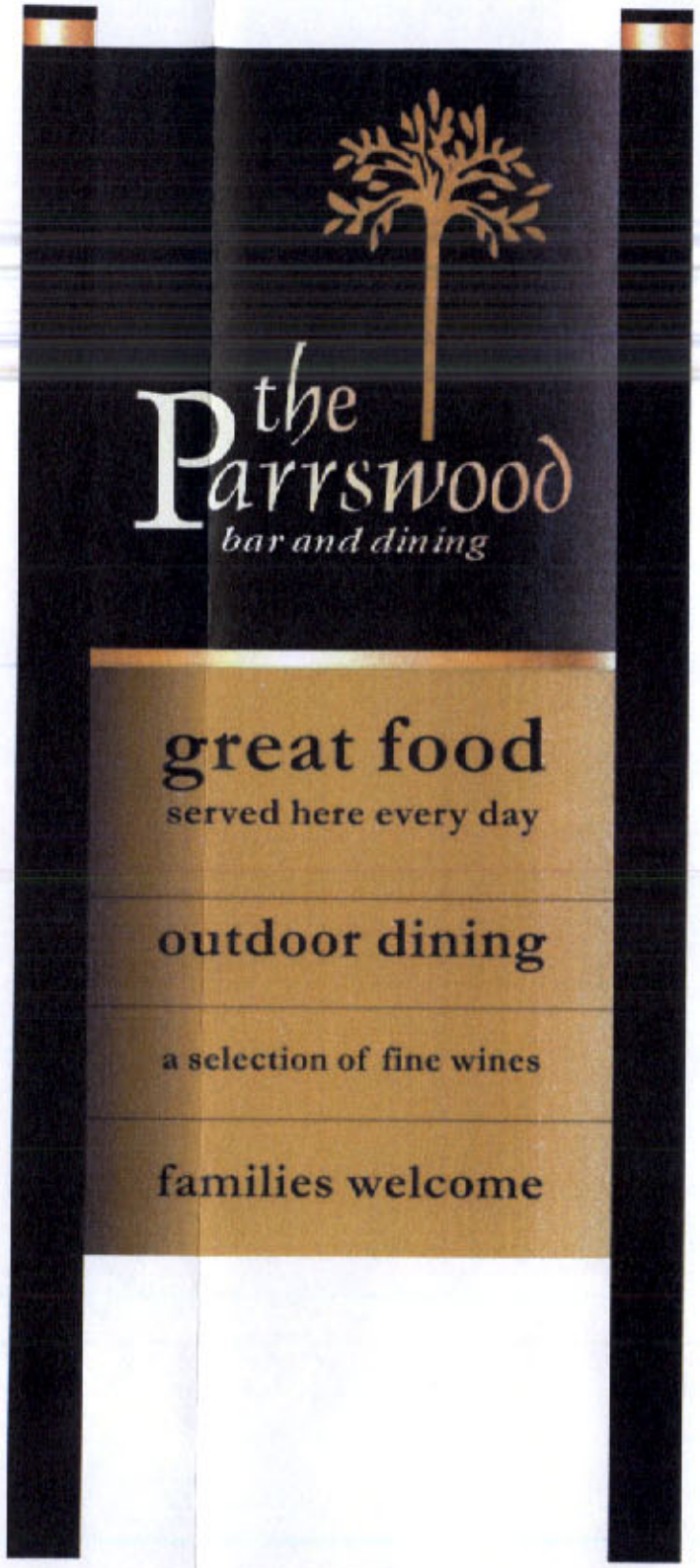

SIGN C



SIGN D



SIGN E



SIGN F



SIGN G -nts

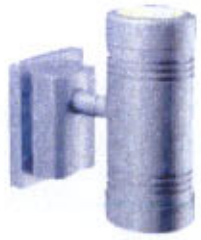

Sign A - Threenew fascia signs complete with individual letters. Illuminated by trough lights. 4600 x 750mm. 840mm high letters (P).

Sign B - One new double legged sign. 1700 x 4000mm.

Sign C - Two new amenity boards. 600 x 940mm.

Sign D - Two new chalkboards. 600 x 940mm.

Sign E - One new lantern over side entrance. 380 x 660mm.

Sign F - One lantern lantern over main entrance. 600 x 800mm.

Sign G - Fifteen up / down lights. 80 x 165 x 80mm.

Scale 1:20 @ A3

IS/parrswood/1

insignia
SIGNS AND SERVICES LIMITED
t: 0113 243 8533 f: 0113 243 8733
email: sales@insigniasigns.biz
www.insigniasigns.biz

CUSTOMER T C G
TITLE Parrswood @ Didsbury
DATE 18/02/08
AMENDMENTS

This document is the property of Insignia Signs who own the copyright therein. The information in this document is given in confidence and without the written permission of Insignia Signs. Given by contract or otherwise the document must not be copied reprinted or reproduced in any material form either wholly or in part nor must the contents of the document or any method or technique available therefrom be disclosed to any third party.

colours shown on visual are indicative only
please contact for exact colour reference

SIGN A - scale 1:10

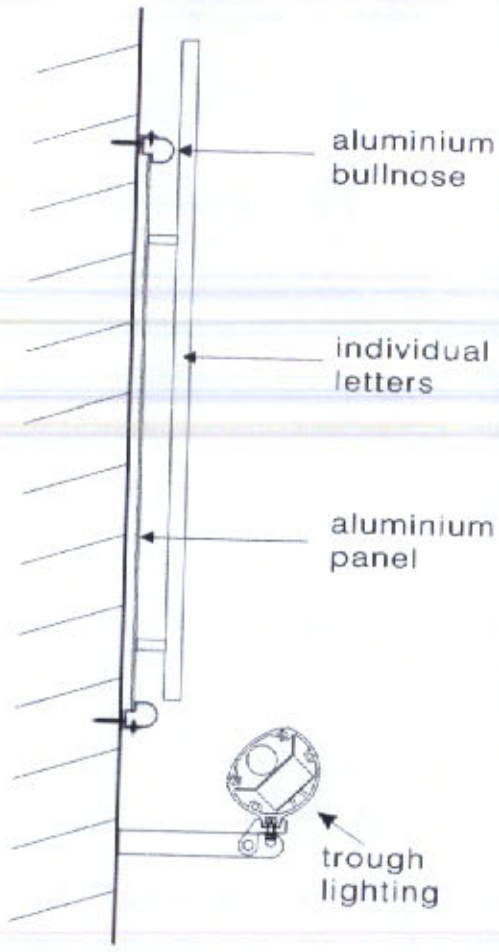

SIGN B - scale 1:20

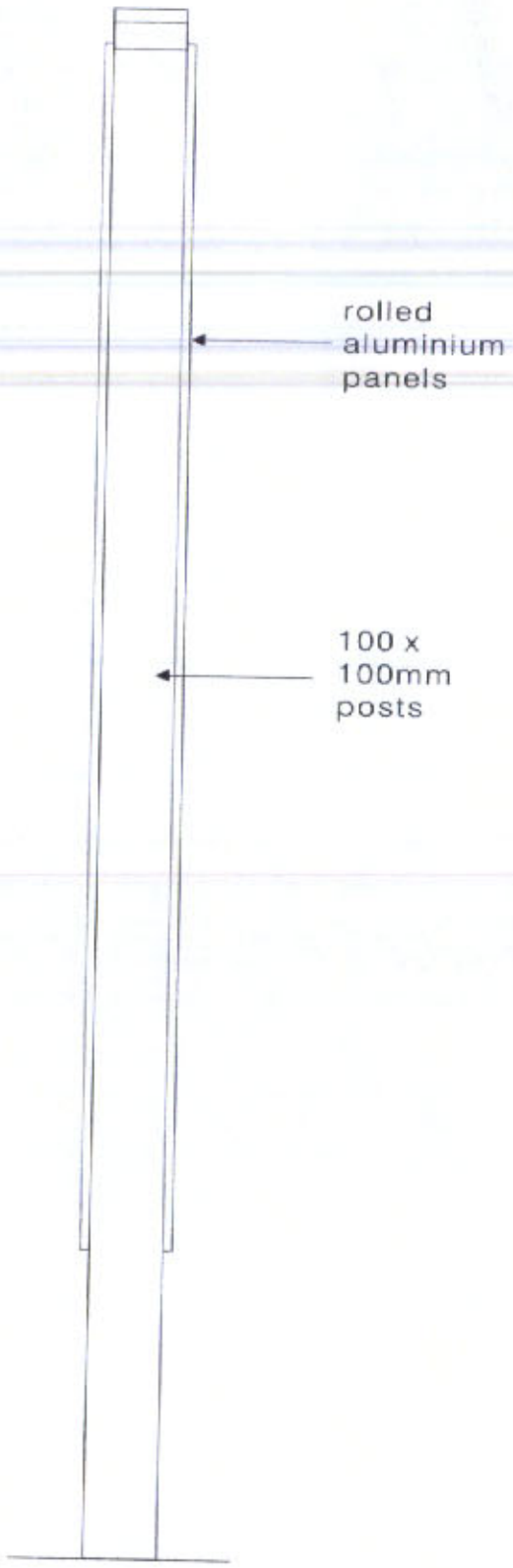

SIGNS C & D - scale 1:10

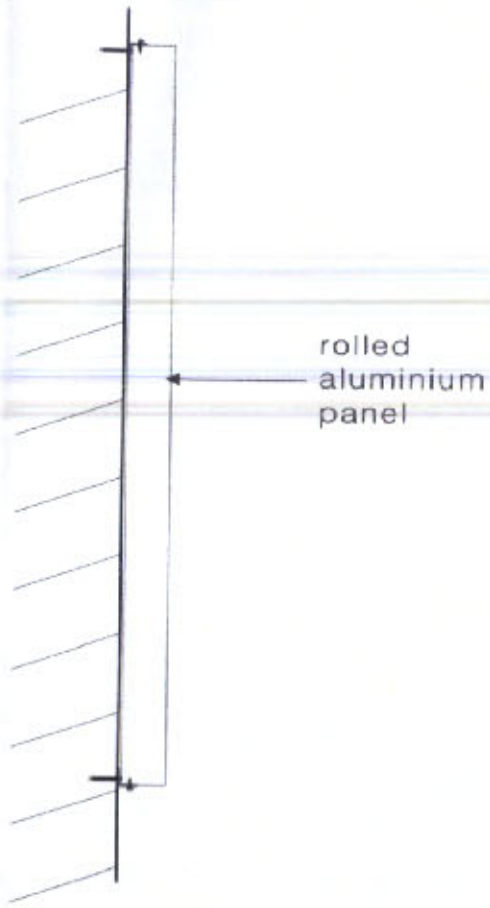

PLANNING
ACK'D
REPLIED
RECD 14 APR 2008
INIT RECD | DATE
M
M
M
FOR ACTION

Scale 1:10 & 1:20 @ A3

IS/parrswood/3

insignia
SIGNS AND SERVICES LIMITED
t: 0113 243 8533 f: 0113 243 8733
email: sales@insigniasigns.biz
www.insigniasigns.biz

CUSTOMER TCG
TITLE Parrswood @ Didsbury
DATE 18/02/08
AMENDMENTS

This document is the property of Insignia Signs who own the copyright therein. The information in this document is given in confidence and without the written permission of Insignia Signs. Given by contract or otherwise the document must not be copied reprinted or reproduced in any material form either wholly or in part nor must the contents of the document or any method or technique available therefrom be disclosed to any third party.

colours shown on visual are indicative only
please contact for exact colour reference







PLANNING
ACK'D
REPLIED
RECD 14 APR 2008
INIT | RECD | DATE
M
M
M
FOR ACTION

Scale 1:100 @ A3

IS/parrswood/2

insignia
SIGNS AND SERVICES LIMITED
t: 0113 243 8533 f: 0113 243 8733
email: sales@insigniasigns.biz
www.insigniasigns.biz

CUSTOMER T C G
TITLE Parrswood @ Didsbury
DATE 18/02/08
AMENDMENTS

This document is the property of Insignia Signs who own the copyright therein. The information in this document is given in confidence and without the written permission of Insignia Signs. Given by contract or otherwise the document must not be copied reprinted or reproduced in any material form either wholly or in part nor must the contents of the document or any method or technique available therefrom be disclosed to any third party.

colours shown on visual are indicative only please contact for exact colour reference