ISSUE	DATE	NOTES	APP
E-PP	01/10/2008	PLANNING PERMISSION -P1	-

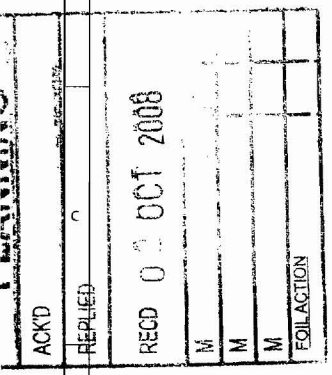

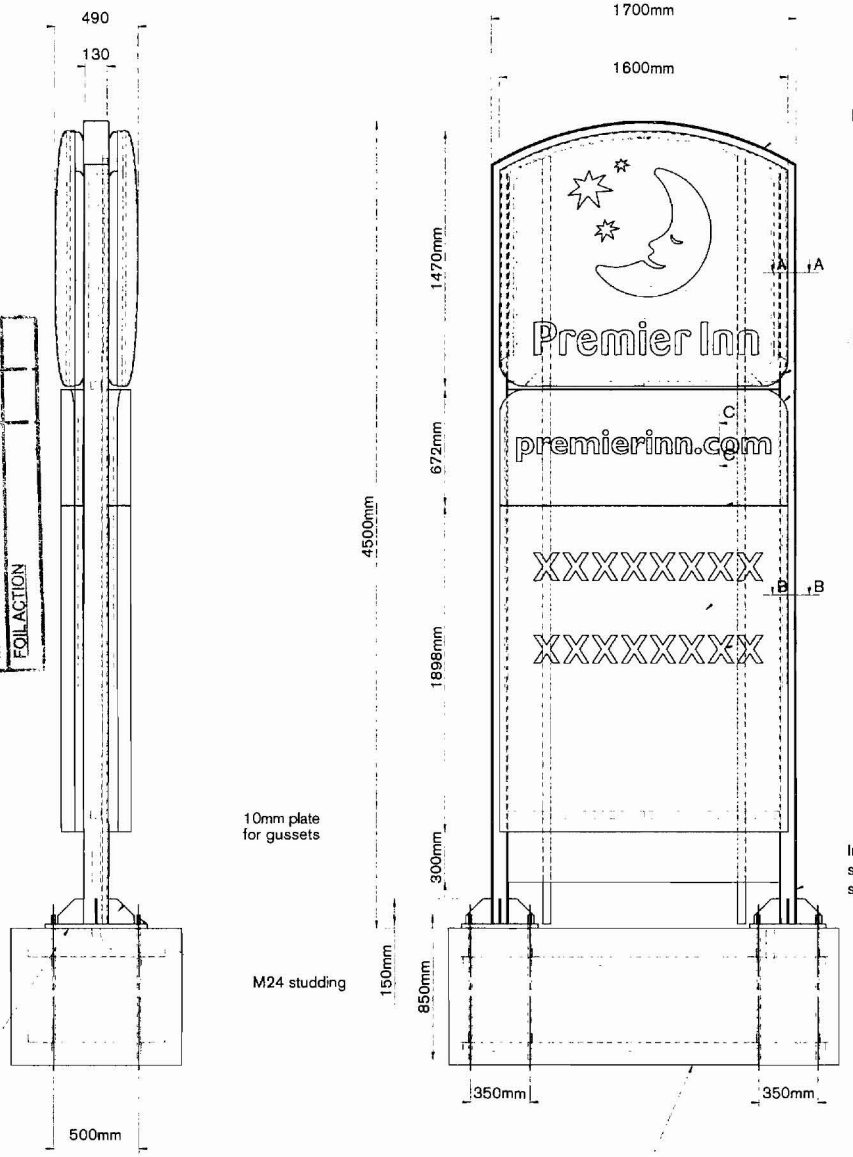

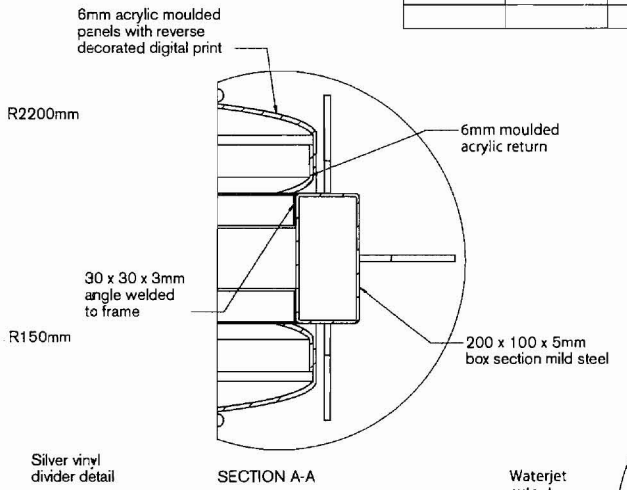

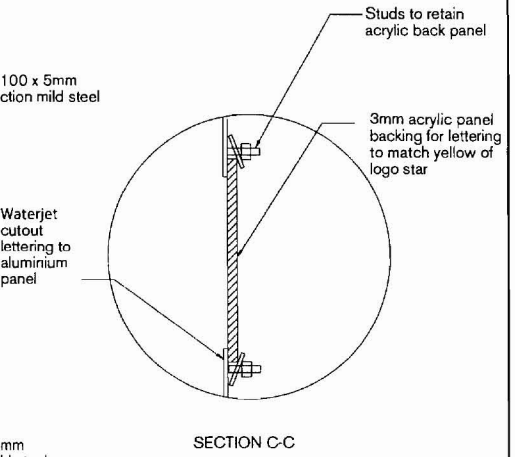

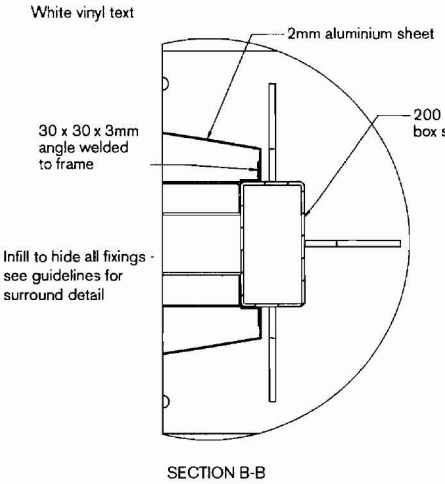

SPECIFICATION:

2mm aluminium panels powder coated to match Pantone 519c 40% gloss (eggshell)

6mm moulded non reflective clear acrylic badge with reverse decorated print

Acrylic returns inked/painted to match digital print

Frame to be finished in RAL 9006 metallic silver

Internally illuminated badge

Internally illuminated upper ox panel with waterjet cutout lettering acrylic back panel to match yellow of logo star

T8 cool white tubes internal illumination

ENDPOINT CONFIRMS P1 WILL NOT BE LOCATED ON THE PUBLIC HIGHWAY AND WILL NOT OBSTRUCT PEDESTRIAN MOVEMENT OR OR RIGHT OF WAY.

ENDPOINT LTD.
165 TOWER BRIDGE RD
LONDON SE1 3LW

TEL: 020 7089 2670
FAX: 020 7089 2671
www.endpoint.co.uk

TITLE: 404 - Manchester City (Deansgate locks): Red Lion

MATERIAL	N/A			SHRINKAGE	N/A
FINISH	N/A	GENERAL WALL	N/A	GENERAL DRAFT	N/A
DRAWN BY		CHECKED	N/A	SCALE	

THIS DRAWING IS NOT TO BE USED FOR MANUFACTURE WITHOUT THE EXPRESS WRITTEN APPROVAL OF THE CLIENT

© ENDPOINT LTD CONFIDENTIAL UNAUTHORISED COPYING, DISCLOSURE & PROHIBITED DISTRIBUTION

THIRD ANGLE PROJECTION

TOLERANCES UNLESS OTHERWISE STATED
0 ±0.5
0.0 ±0.1
0.00 ±0.05

ALL DIMENSIONS IN mm

DRG No. 404 - P1