

FASCIA SECTION SCALE 1:20@A3

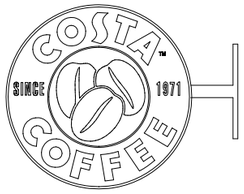

CIRCULAR PROJECTING SIGN, OVERALL DIMENSIONS - 100mm DEEP, 600mm DIAMETER, TOTAL PROJECTION 750mm. CONSISTING OF COSTA COFFEE FRET CUT LETTERING ON ALUMINUM STOVE ENAMELLED COSTA RED BACKGROUND, WITH SATIN STAINLESS STEEL COFFEE BEANS IN CENTRE. ILLUMINATION THROUGH COSTA COFFEE LETTERS, OUTLINE OF BEANS AND PERIMETER CIRCLES ONLY.

PROJECTING SIGN SCALE 1:20@A3

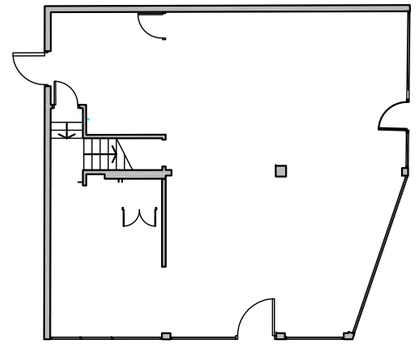



SITE PLAN SCALE 1:200 @A3



EXTERNAL ELEVATION B SCALE 1:50@A3

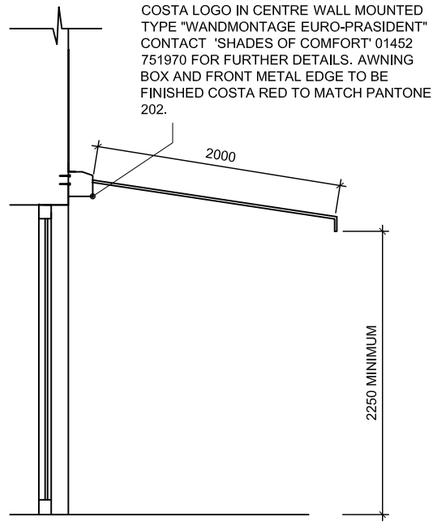

INDICATIVE AWNING SECTION SCALE 1:50@A3

THIS DRAWING IS NOT TO BE SCALED, ONLY FIGURED DIMENSIONS ARE TO BE FOLLOWED. CONTRACTORS TO CHECK ALL DIMENSIONS & CONDITIONS ON SITE & REFER ANY DISCREPANCY TO S.G.M MANAGEMENT AND DESIGN LTD. THIS DRAWING IS THE SOLE PROPERTY OF S.G.M MANAGEMENT AND DESIGN LTD., AND MAY NOT BE COPIED OR REPRODUCED IN ANY MANNER WHATSOEVER WITHOUT THE OWNERS CONSENT. © COPYRIGHT

REVISIONS:
A - SCHEMATIC ISSUE - 07.06.2013 - PA
B - SIGANGE ADDED TO RIGHT-HAND FASCIA PANEL, PROJECTING SIGN OMITTED - 11.06.2013 - LS
C -SHOPFRONT NOTES AMENDED & NEW SECTION SHOWN 20.06.2013 - LS
D - NOTES AMENDED TO SHOPFRONT BY COSTA - 25.07.2013 - LS
E- EXISTING DOOR TO BE RETAINED, 1 NO. POS ADDED - 16.09.2013 - LS
F- FULL PACK ISSUE - 18.09.2013 - LS

CLIENT:	COSTA COFFEE
PROJECT NUMBER:	13236
PROJECT:	1-3 CHORLTON PLACE, CHORLTON, MANCHESTER, M21 9AQ
DRAWING TITLE:	PROPOSED EXTERNAL ELEVATIONS
SCALE:	AS SHOWN
DRAWN BY:	LS
PROJECT MANAGER:	AS
DATE:	06.06.2013

SGM Management & Design Ltd
Architecture Design Project & Value Management
104 HIGH STREET, THAME, OXON, OX9 3DZ.
TEL: 01844 218333 FAX: 01844 218444
sgm.admininstration@s-g-m.co.uk
www.s-g-m.co.uk

2.2
F