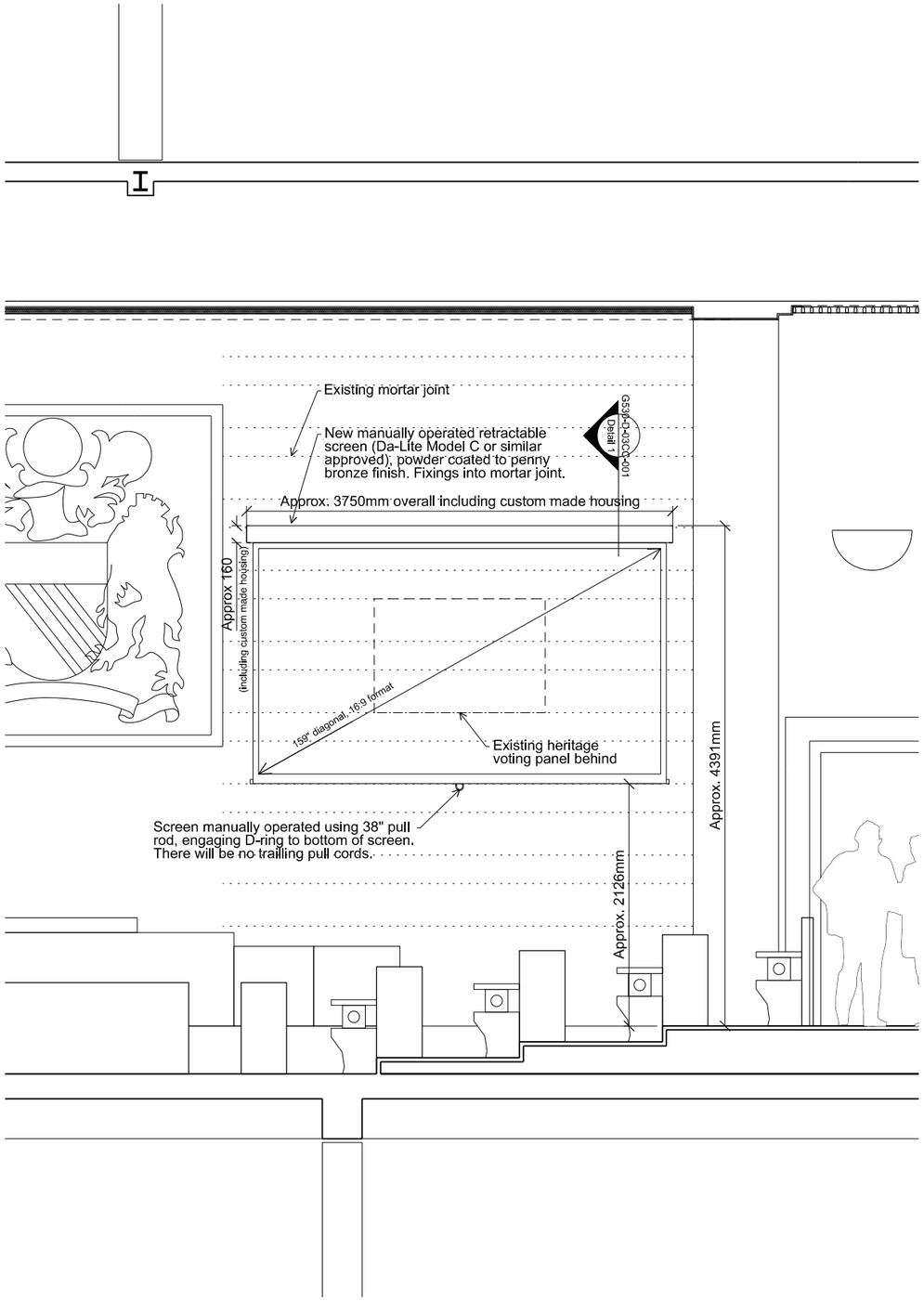

Proposed wall mounted pull down screen (1:50@A3)

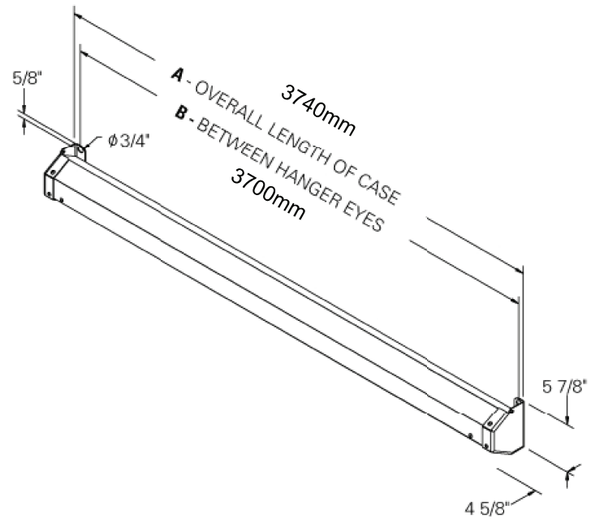

Typical housing for Da-Lite Model C spring roller type screen (159" diagonal, 16:9 format)

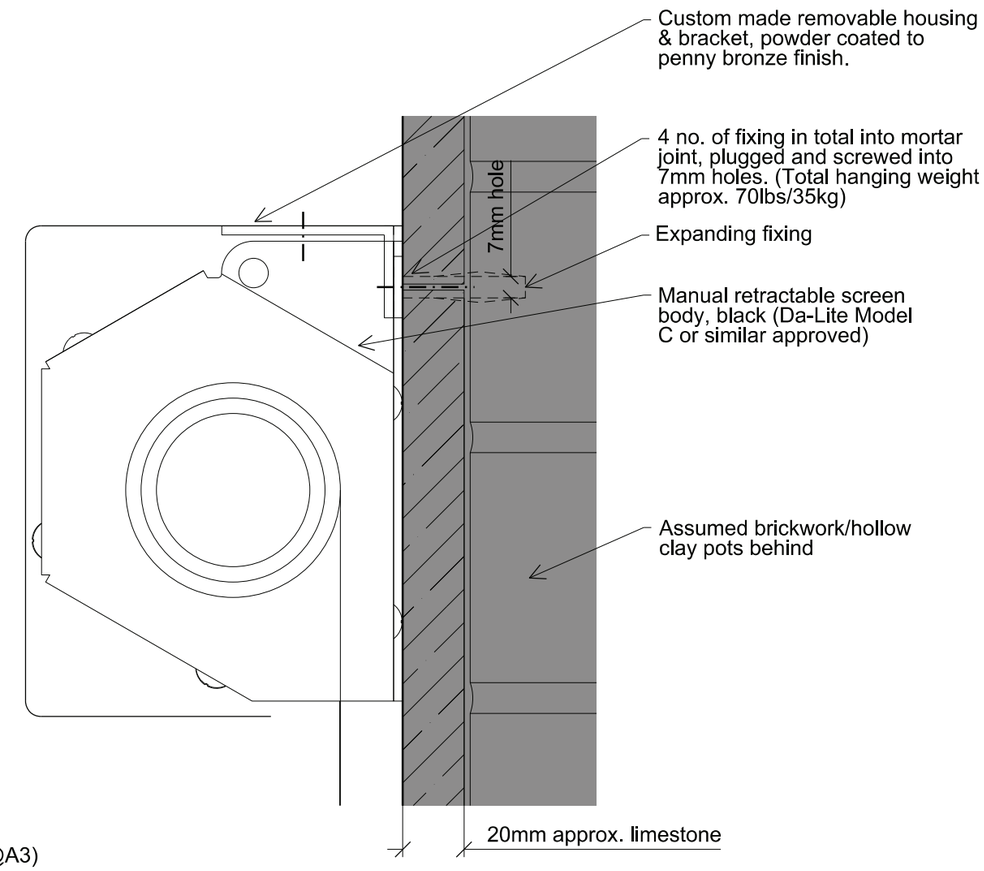

Detail 1 (1:2@A3)

IAN SIMPSON ARCHITECTS LIMITED

Note:
This drawing is copyright
Do not scale off dimensions.
All dimensions to be checked on site by contractor.
Contractor to report any dimensional discrepancies, errors or omissions prior to commencing on site.

Rev	Date	Description
P1	01-02-2013	Notes revised following HOK comments
P2	04-02-2013	Details to wall added, Notes to fixing revised.

North

Project Title: Manchester Townhall Complex Transformation Project
Town Hall Extension

Drawing Title: Wall Mounted Pull Down Screen

Reason For Issue: PLANNING / LBC

Scale: As shown @ A3

Date: JAN 2013

Job No: 1253

Drawing No: 1253-ISA-DR-G530-D-03CC-001

Revision: P2

IAN SIMPSON ARCHITECTS
Riverside, 4 Commercial Street, Manchester, M15 4RQ
T +44 (0)161 835 2345 F +44 (0)161 839 4808
5 - 8 Roberts Place, London EC1R 0BB
T +44 (0)20 7549 4000 F +44 (0)20 7490 5331
mail@iansimpsonarchitects.com

© Ian simpson architects ltd 2008