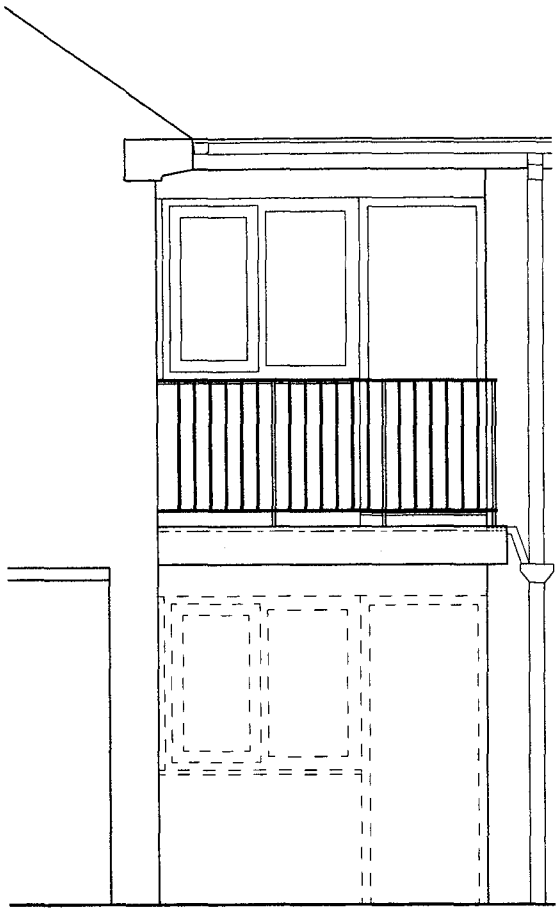

Elevation

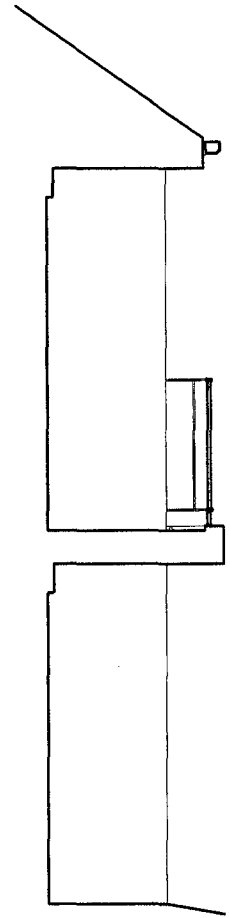

Section A-A

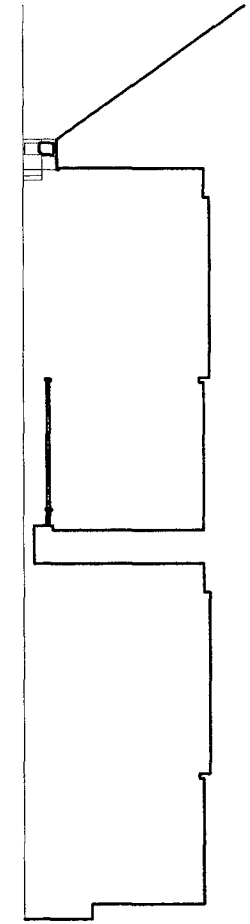

Section B-B

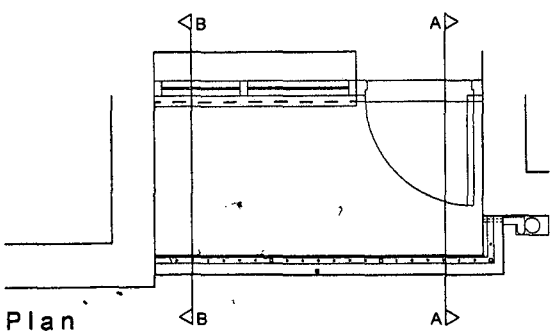

Plan

Do not scale from this drawing.
All dimensions to be checked on site by contractor prior to construction.

Client	Description			Job No	2437
Willow Park Housing Trust	Plan, Sections and Elevation as Existing			Drg No	02
Job	Drawn	Date	Scale	Rev.	-
Cottage Flat Improvements	CD	28/11/2011	1:50		

Bernard Taylor Partnership Ltd.
Architects
ELIZABETH HOUSE, 486 DIDSBURY ROAD, HEATON MERSEY
STOCKPORT, CHESHIRE, SK4 3BS
Tel: 0161-443 1221
Fax: 0161-442 1672
E-mail: Info@BernardTaylor.co.uk