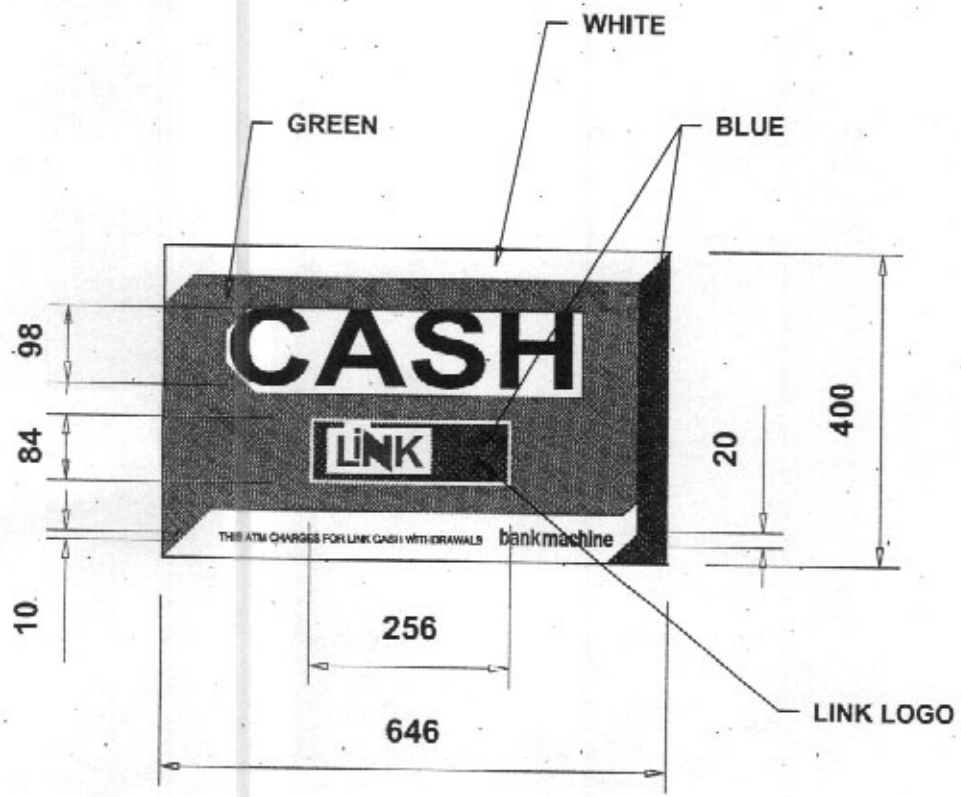

PLANNING
ACK'D
REPLIED
12 MAR 2008



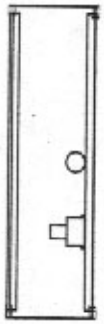

SECTI0ON **AA**

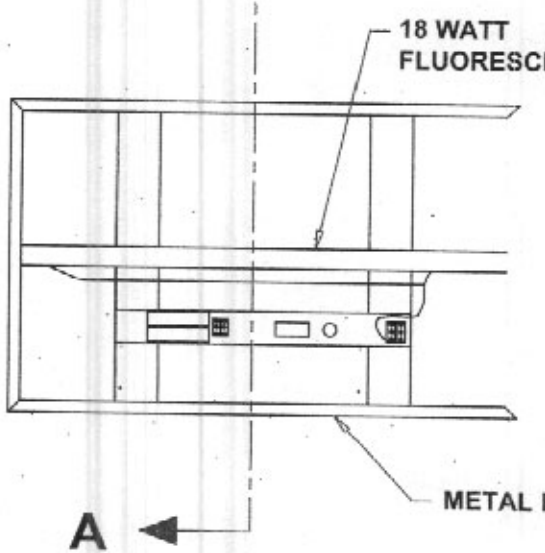

INTERNAL VIEW WITH FRONT PANEL REMOVED

BANK MACHINE ILLUMINATED SIGN	DATE 22/06/06	SCALE 1:10 AT A4 SIZE	REV	DESCRIPTION	DATE
Complete Technical Services Ltd. Tel:(01709821757)		DRAWN BM	01	INTERNAL VIEW ADDED	22-08-06
C.T.S. Hope Street, Rotherham, S60 1LH	DRG No. CTS0027		02	SECTION AA ADDED	15-09-06
			03		