Singleton Clamp
& PARTNERS

Directors:
William C. P. Booker B.Sc.
David Roberts I.Eng. FIHIE, MIHT

Technical Director:
James R. Budd BA (Hons), MSc, MCILT, MIHT
Associate Directors:
Gordon Meikle MIHT
David R. Spacey B.Eng (Hons), C. Eng, MICE

Consultants:
Peter M. Prutton B.Sc, C.Eng, MICE
Brian Armstrong MIHT

2 Mount Street
Albert Square
Manchester
M2 5WQ

Telephone: 0161-832-4400
Fax: 0161-832-5111
E-mail: consult@singletonclamp.co.uk
Website: www.singletonclamp.co.uk

VAT Registration No. 726 9294 00

GD/07181
28th June 2007

TRANSPORT ASSESSMENT FOR PROPOSED RETAIL UNITS AT BROOKWAY RETAIL PARK BAGULEY

CLIENT: KING STURGE

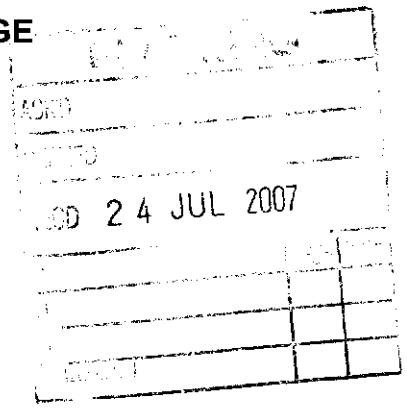

1.0 INTRODUCTION

1.1 Singleton Clamp & Partners have been instructed by King Sturge to provide highway and traffic advice in connection with a proposed retail development on land off Altrincham Road in Baguley.

1.2 The site, alongside Altrincham Road, is currently a disused petrol station. The site is surrounded by other retail uses and residential development.

1.3 The application is for 1436m^2 non food retail units. The proposal is for four units located in two buildings.

1.4 It is proposed that the units are accessed via an existing four arm signalised junction which currently serves Brookway Retail Park and a Tesco store to the south.

1.5 For the purposes of this report it is anticipated that the development will be completed and operational in 2008.

2.0 EXISTING SITE LOCATION AND CONDITIONS

2.1 The site is located off the A560 Altrincham Road which runs between the A56 in Altrincham to the M56/A5103, which is a major route into Manchester City Centre. The site location plan can be seen in Figure 1.

2.2 The site is currently occupied by a disused petrol station alongside Altrincham Road in Baguley. In a clockwise direction the site is surrounded to the east by the access road to the Brookway Retail Park, to the south by Altrincham Road and further south a Tesco extra store, to the west is residential development and to the north is residential and car parking to the retail park. The existing petrol station has three accesses directly onto Altrincham Road, one main entrance and one main exit with a smaller access to the east.

2.3 The Brookway Retail Park is currently occupied by three stores, Wickes, Matalan and JJB. Planning permission has been granted for a small Pets at Home store on the corner of the access with Altrincham Road. This unit is currently under construction.

2.4 The Retail Park will have a total of 300 parking spaces once the Pets at Home store has been constructed.

Existing Traffic Flows

2.5 To establish the current level of background traffic along Altrincham Road and both in and out of the Tesco store and retail park, a traffic survey was commissioned. The counts were carried out on Saturday 16th June between 1400-1600 and Tuesday 19th June between 1700-1800. The raw count data can be found in Appendix 1 and is summarised in Figure 2.

2.6 The traffic counts revealed flows of 1149 vph eastbound and 1198 vph westbound on a Saturday during 1500-1600. The weekday flows recorded flows of 1379 vph eastbound and 1065 vph westbound.

2.7 Although the previous use as a petrol station would have generated significant levels of traffic, these would have been accessed directly from the main road. Due to the high levels of traffic along Altrincham Road and the close proximity of retail park access it is unsuitable to reuse the site with direct access from Altrincham Road. For this reason all

development traffic generated by the proposals has been assessed as new on the retail park access.

2.8 Whilst the traffic survey was carried out a count of the numbers of cars parked in the retail park car park was carried out at the start of each hour. The following table shows the number of vehicles parked on a weekday and Saturday.

	Weekday	Saturday
1400	-	161
1500	-	191
1600	-	175
1700	70	-
1800	60	-

Table 2.1

3.0 DEVELOPMENT PROPOSALS

3.1 The proposed development is for an extension to the existing retail park, forming a further four units totalling 1436m^2.

3.2 The development will be accessed via the existing four arm signalised junction formed with Altrincham Road. The existing accesses directly onto Altrincham Road will be closed to vehicles however their will be pedestrian access from the frontage.

Proposed Development Trip Generation

3.3 To establish the level of traffic the proposed units will generate, the TRICS database has been interrogated. The following table shows the trip rates for the proposed non-food retail units. To establish an accurate trip rate the 'retail park-excluding food' category has been selected. This is because the retail park category takes into account the fact that a large number of trips are linked within retail developments. Most journeys to a retail park will result in more than one store being visited. The full TRICS outputs for a weekday and a Saturday can be seen in Appendix 2.

	IN	OUT	TOTAL
Weekday 1700-1800	1.26	1.39	2.65
Saturday 1400-1500	3.33	3.10	6.43

Table 3.1

3.4 When these rates are calculated for a Gross Floor Area of 1436m^2, the following trips are generated.

	IN	OUT	TOTAL
Weekday 1700-1800	18	20	38
Saturday 1400-1500	48	45	92

Table 3.2

Car Parking Provision

3.5 The site as a whole will have provision for 328 vehicles. This includes an additional 30 spaces alongside the Wickes store and 19 new spaces provided on the petrol station site. The traffic survey recorded a maximum of 191 vehicles parked on a Saturday at 3pm and 70 at 5pm on a weekday. This shows that a total of 328 spaces will more than adequately accommodate the additional level of traffic associated with the proposals.

4.0 CAPACITY ASSESSMENT OF ACCESS

4.1 To accurately assess the impact of the proposals, the background traffic flows have been factored up to an opening year of 2008. These have been factored up using a low traffic growth factor of 1.012 from the National Road Traffic Forecasts (NRTF). These base 2008 flows can be found in Figure 3.

4.2 To establish the baseline traffic in 2008, the committed development traffic from Pets at Home needs to be included in the background traffic flows. Using the same trip rates as set out in Table 3.1, the Pets at Home trip generation is as follows for a store approximately 450m^2.

	IN	OUT	TOTAL
Weekday 1700-1800	6	6	12
Saturday 1400-1500	15	14	29

Table 4.1

4.3 Both the development traffic in Table 3.1 and the Pets at Home Traffic in Table 4.1 have been distributed according to the base traffic flows recorded in the survey. The distribution of both Weekday and Saturday peaks can be seen in Figure 4. The Pets at Home traffic is shown in Figure 5. The development traffic from the additional retail units is shown in Figure 6.

4.4 The baseline traffic in Figure 7 is obtained from the base 2008 traffic (Figure 3) added to the Pets at Home Traffic (Figure 5). The capacity of the junction has been assessed with the traffic in Figure 7 to establish the existing capacity. The following table shows the assessments for the base situation, carried out using LINSIG software. The full results of the base assessment can be seen in Appendix 3.

		Weekday Existing		Saturday Existing	
		Deg. Saturation(%)	End Queue (pcu)	Deg. Saturation(%)	End Queue (pcu)
1/1	Altrincham Road East- Right	82.3	7	77.8	8
1/2	Altrincham Road East- Ahead	39.6	13	64.6	18
1/3	Altrincham Road East- Left	6.0	1	25.4	3
2/1	Tesco- Ahead and Right	76.9	5	78.4	7
2/2	Tesco- Left	44.0	5	39.4	4
3/1	Altrincham Road West- Left & Ahead	61.7	24	76.4	24
3/2	Altrincham Road West- Right	31.5	2	51.0	5
4/1	Site Access- Ahead and Right	46.9	2	56.6	4
4/2	Site Access- Left	18.0	2	27.8	4
	Cycle Time 90s	PRC (%) 9.3%	TJD (pcuHr) 22.34	PRC (%) 14.8	TJD (pcuHr) 32.30

Table 4.2

4.5 The base LINSIG has been configured to bring the modelled queue lengths in line with the actual average queue lengths recorded. To illustrate, the weekday queue lengths total 77 recorded pcu's whilst the LINSIG model records 61 pcu's. The Saturday actual queue lengths total 83 pcu's whilst LINSIG records 77 pcu's.

4.6 The weekday peak hour operates satisfactorily with base plus committed development. The highest saturation appears on Altrincham Road East (right turn) with a queue of seven vehicles. The largest queue is recorded on Altrincham Road West (left and ahead) although this is spread over two long lanes and a flare.

4.7 The junction has also been assessed with development traffic from the additional units. These total traffic flows can be found in Figure 8. The following table shows the results with the development traffic. The assessment results can be seen in full in Appendix 4.

		Weekday Existing		Saturday Existing	
		Deg. Saturation(%)	End Queue (pcu)	Deg. Saturation(%)	End Queue (pcu)
1/1	Altrincham Road East- Right	85.7	8	79.8	9
1/2	Altrincham Road East- Ahead	39.6	13	69.8	19
1/3	Altrincham Road East- Left	6.0	1	27.5	3
2/1	Tesco- Ahead and Right	82.4	6	81.8	7
2/2	Tesco- Left	44.1	5	38.3	4
3/1	Altrincham Road West- Left & Ahead	62.1	24	83.9	26
3/2	Altrincham Road West- Right	31.5	2	48.3	5
4/1	Site Access- Ahead and Right	49.6	3	58.9	5
4/2	Site Access- Left	20.1	2	30.0	4
	Cycle Time 90s	PRC (%) 5.1%	TJD (pcuHr) 23.82	PRC (%) 7.3	TJD (pcuHr) 35.62

Table 4.3

4.8 These results show that the additional retail development adds one vehicle to queue lengths on Altrincham Road East (Right), Tesco (ahead and right) and site access (ahead and right) in the weekday peak. All arms are below saturation with the development traffic added. On a Saturday a maximum of two additional vehicles are added on to Altrincham Road West (Left and Ahead). Again, all arms are below saturation and the queue lengths recorded are only marginally higher overall than the base situation.

5.0 SUSTAINABILITY

5.1 A key issue in the Government's policy for the future of Transport is based around sustainability. The Planning Policy Guidance Note 13 (Transport) gives Guidance on how greater levels of sustainability can be achieved. This document has been supported and beefed up in the latest DfT Guidance on Transport Assessments.

5.2 The objectives of the guidance are to integrate planning and transport at the national, regional, strategic and local levels to;

- Promote more sustainable transport choices
- Promote accessibility to jobs, shopping, leisure facilities and services b public transport, walking and cycling, and;
- Reduce the need to travel, especially by car

The ability to access the site by means of walking, cycling and by public transport has been assessed below.

Walking

5.3 PPG13 highlights that at local level walking is the most important mode of transport and offers the greatest potential to replace short car trips, particularly under 2km. Further guidance is given in the IHT document 'providing journeys on foot' which outlines additional thresholds for walking distance as outlined below.

- A 400m walk is considered desirable
- An 800m walk is considered acceptable
- A 1200m walk is the preferred maximum distance

5.4 Figure 9 shows the 400m, 800m and 1200m walking distance from the site. This shows that large residential areas of Baguley, Brooklands and Timperley are included in the walking distance.

Cycling

5.5 PPG13 states that cycling offers the greatest alternative to the private car for journeys up to 5km in length, either as a whole or as part of a longer public transport trip.

5.6 Figure 10 illustrates the 5km cycling distance from the site. This includes a much wider residential area such as a large part of Timperley, Brooklands, Baguley, Northern Moor and Sale Moor.

5.7 The site is bordered by a shared cycleway/footway running alongside Altrincham Road which runs from Altrincham through Timperley and up towards the city centre alongside the A5103.

5.8 It is therefore considered that the site is well located for encouraging the use of cycles for longer journeys as set out in PPG13.

Public Transport

5.9 The nearest bus stops are located approximately 200m away from the site access, to the West on Altrincham Road.

5.10 There are at least seven regular bus services serving the site. These include number 11, 18/18A, 99, 103, 109, 268, 370/371. These buses run between Altrincham, Stockport Manchester City Centre, Trafford Centre, Wythenshawe Hospital and Trafford Hospital. There are a total of 184 buses running past the site on a weekday and 150 buses on a Saturday. Of the buses running past the site the most frequent is service number 11 which runs between Altrincham and Stockport every 10 minutes on a weekday, 12 minutes on a Saturday and every 20 minutes on a Sunday. The bus services are summarised in Figure 11.

5.11 The bus provision to the site is very good, with a wide range of locations served operating throughout most of the day. The Sunday service is particularly good with five of the services running with a frequency of between 20 to 60 minutes.

6.0 CONCLUSIONS

6.1 This report has investigated the impact on the local highway network of redeveloping the former petrol station on land off Altrincham Road for retail units. The report has also investigated the sustainability of the site and the alternative ways of accessing the site from using the private car.

6.2 The capacity of the access junction has been investigated using LINSIG. This has revealed marginally higher queue lengths as a result of the marginally increased numbers of vehicles visiting the site. It is presumed that large numbers of trips to the site will be linked either with other units within the retail park or with the nearby Tesco store. For this reason the trip rates used in the assessments are deemed to be robust.

6.3 The car parking within the site as a whole will increase from 300 to 328 spaces. From the traffic survey carried out, the peak number of vehicles parked was 191 on a Saturday afternoon. This shows that there is a large amount of spare capacity within the site car park.

6.4 The site has shared cycleway/ footways running alongside, parallel to Altrincham Road. There are also a high number of buses running past the site which have been summarised to reveal 184 buses every day. The site as a whole is sustainable due to its proximity to existing retail units and highly populated residential areas.

6.5 For the reasons set out above there are no highways, traffic or transportation reasons to withhold planning consent for the redevelopment of this site for retail units.

G. Day
For Singleton Clamp & Partners Ltd
28th June 2007

FIGURE 1



Figure 1	Site Location	
NTS	June 2007	07181 Brookway Retail Park, Baguley

Singleton Clamp & PARTNERS
Consulting Engineers and Transportation Planners

FIGURE 2

Saturday 1500-1600

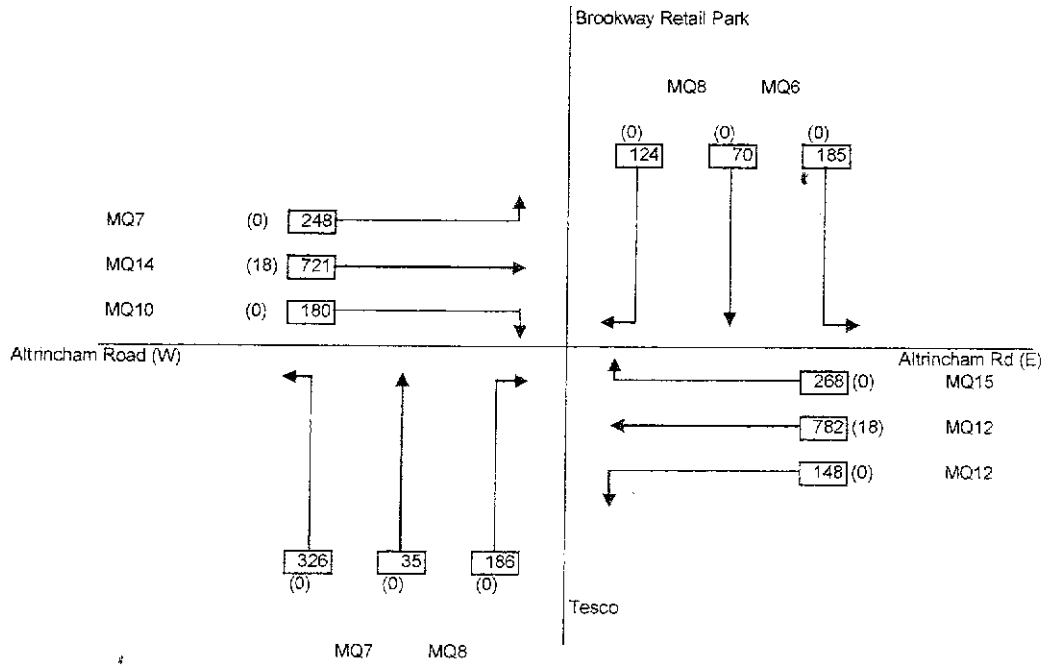

Weekday 1700-1800

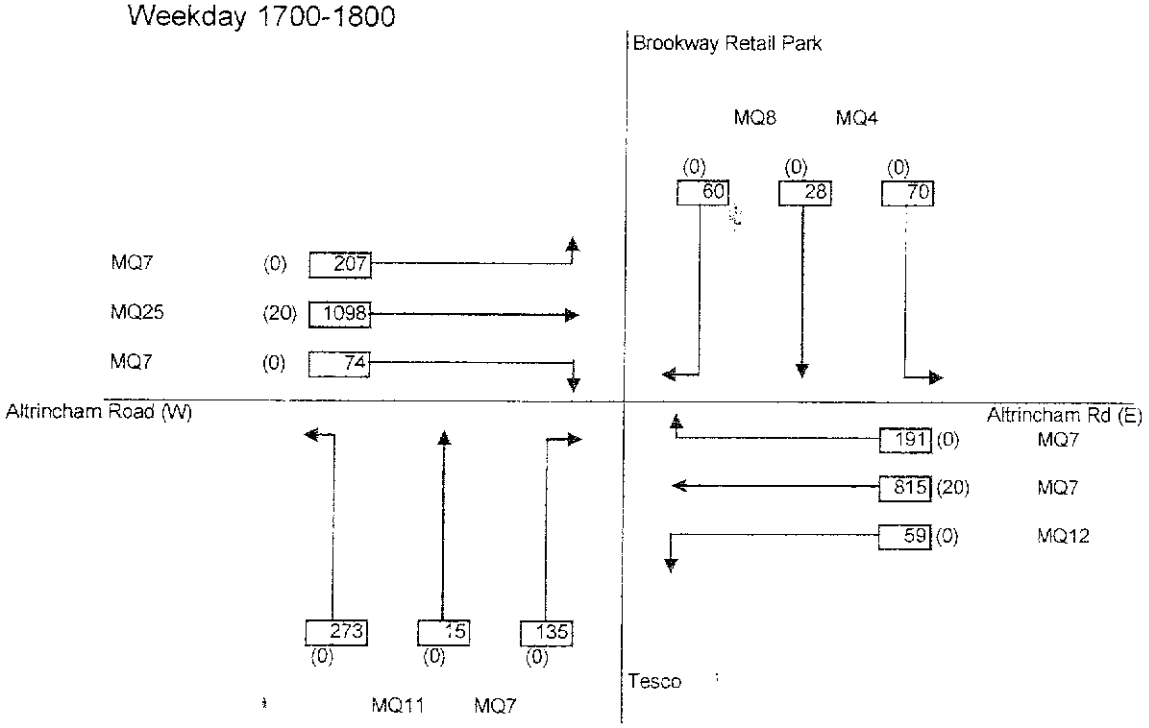

Figure 2	Drawing Title: Base Traffic Flows recorded on Saturday16th & Tuesday 19th June 2007			
Singleton Clamp & PARTNERS Consulting Engineers and Transportation Planners	Client: King Sturge	Job Title: Brookway Retail Park, Baguley		
	Date: June 2007	Scale: NTS	Drawn By: GD	Job No.: 07181

FIGURE 3

Saturday 1500-1600

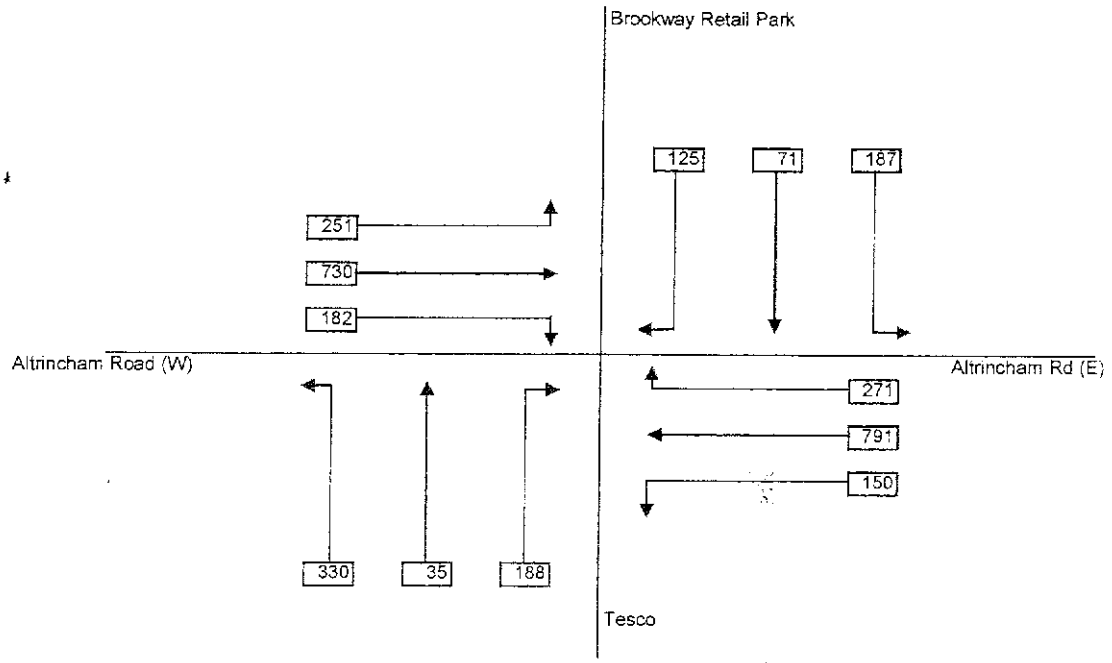

Weekday 1700-1800

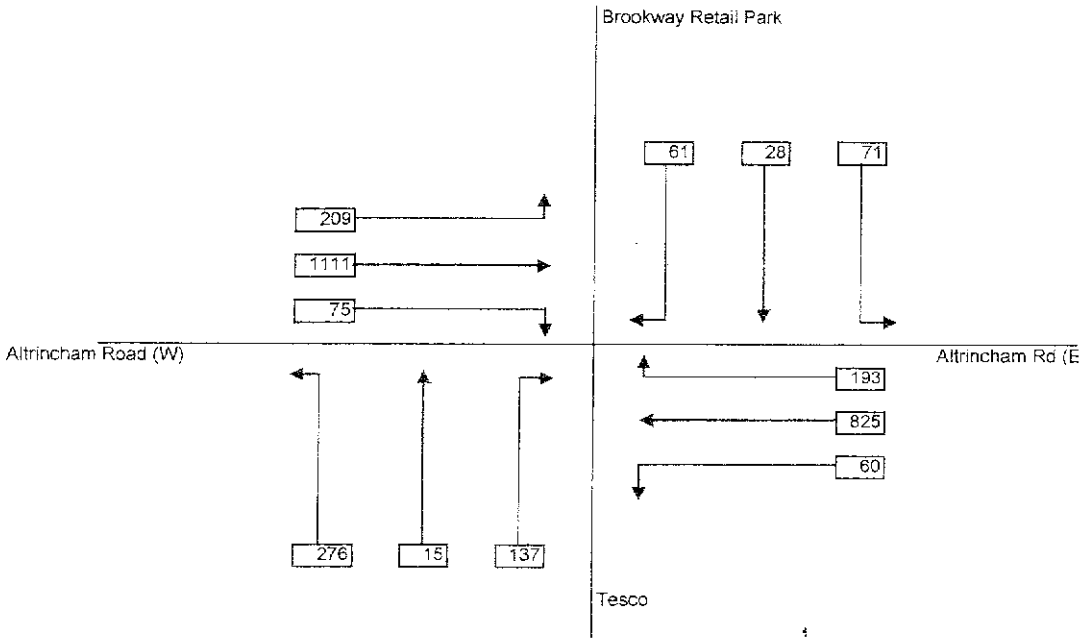

Figure 3	Drawing Title: Base Traffic Flows 2008			
Singleton Clamp & Partners, Consulting Engineers and Transportation Planners	Client: King Sturge	Job Title: Brookway Retail Park, Baguley		
	Date: June 2007	Scale: NTS	Drawn By: GD	Job No.: 07181

FIGURE 4

Saturday 1500-1600

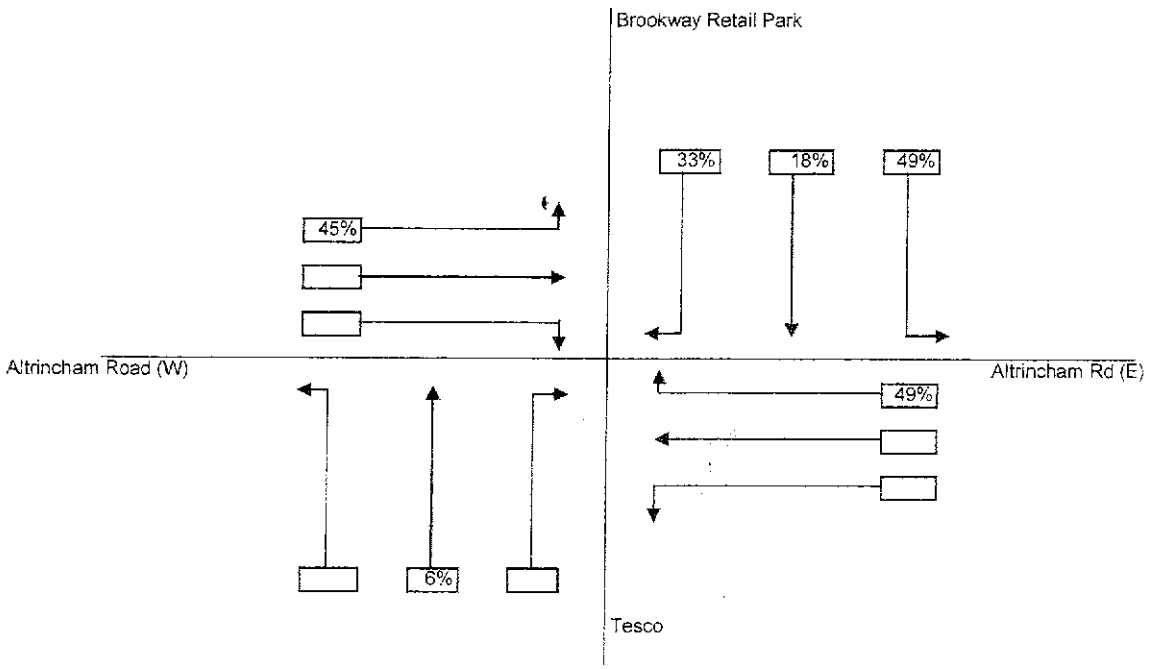

Weekday 1700-1800

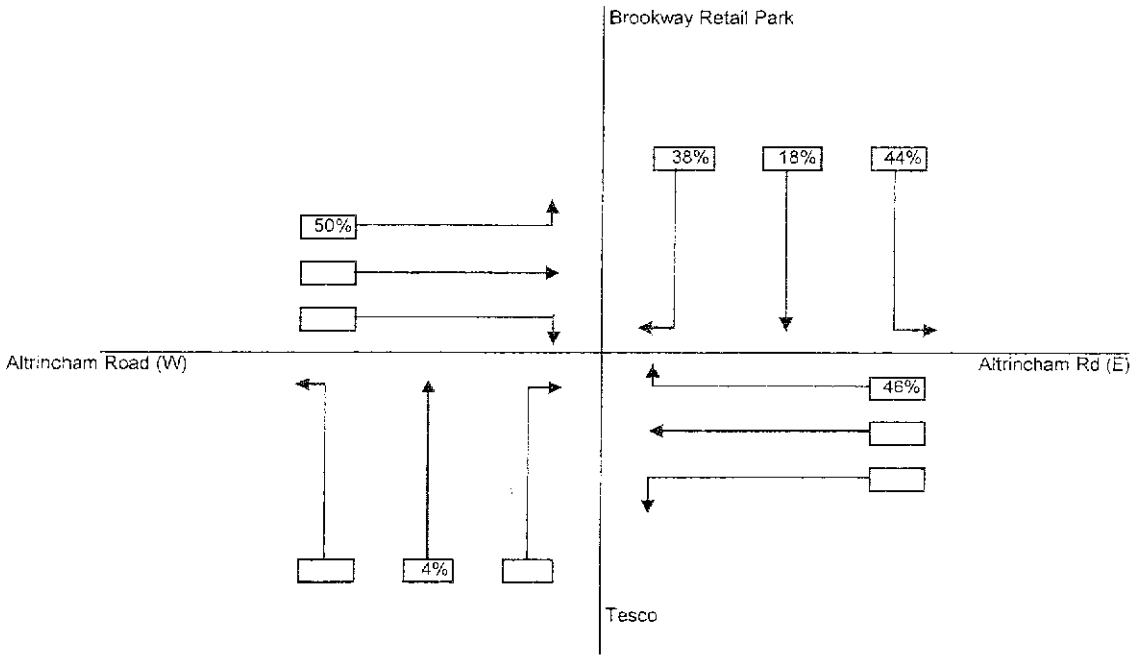

Figure 4	Drawing Title: Distribution of Development Traffic			
Singleton Clamp & Partners, Consulting Engineers and Transportation Planners	Client: King Sturge	Job Title: Brookway Retail Park, Baguley		
	Date: June 2007	Scale: NTS	Drawn By: GD	Job No.: 07181

FIGURE 5

Saturday 1500-1600

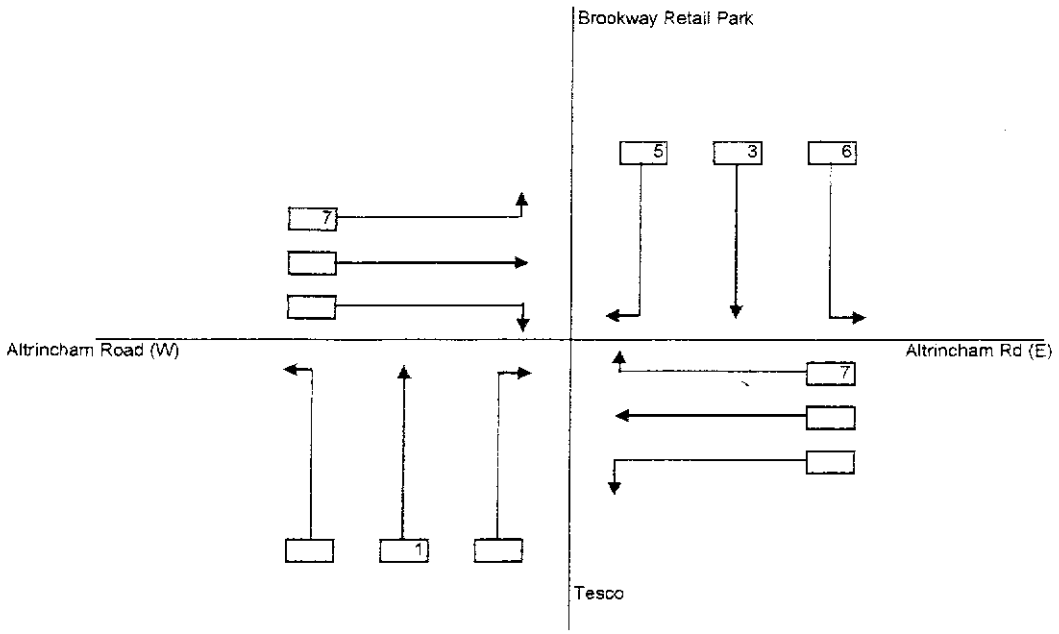

Weekday 1700-1800

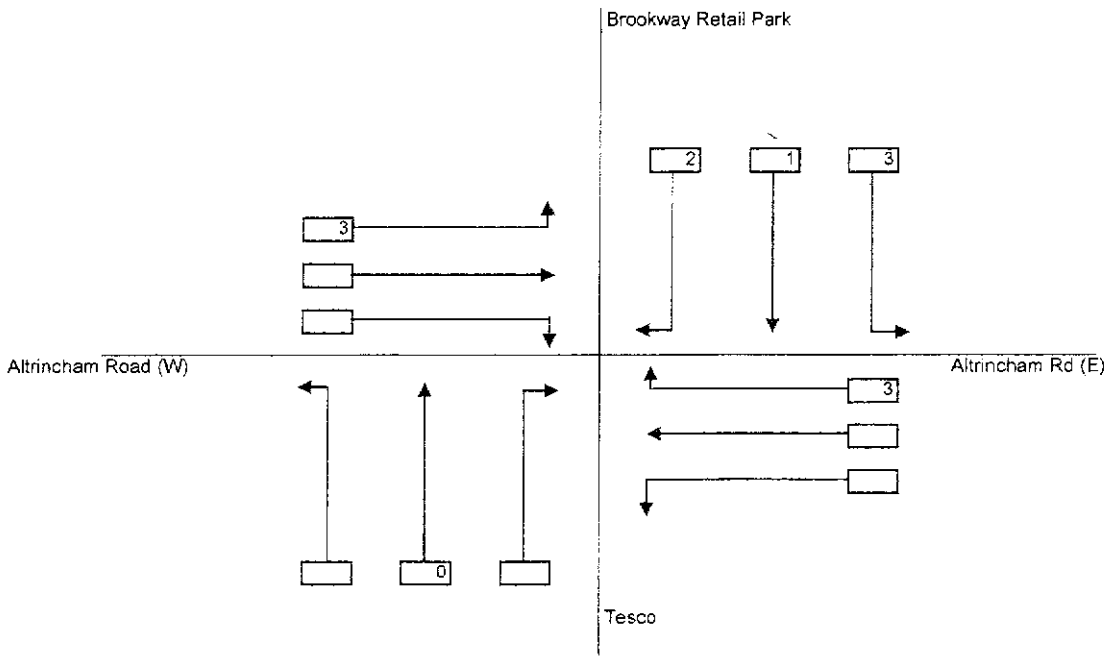

Figure 5	Drawing Title: Pets at Home Committed Development Traffic				
Singleton Clamp & Partners, Consulting Engineers and Transportation Planners	Client: King Sturge	Job Title: Brookway Retail Park, Baguley			
	Date: June 2007	Scale: NTS	Drawn By: GD	Job No.: 07181	

FIGURE 6

Saturday 1500-1600

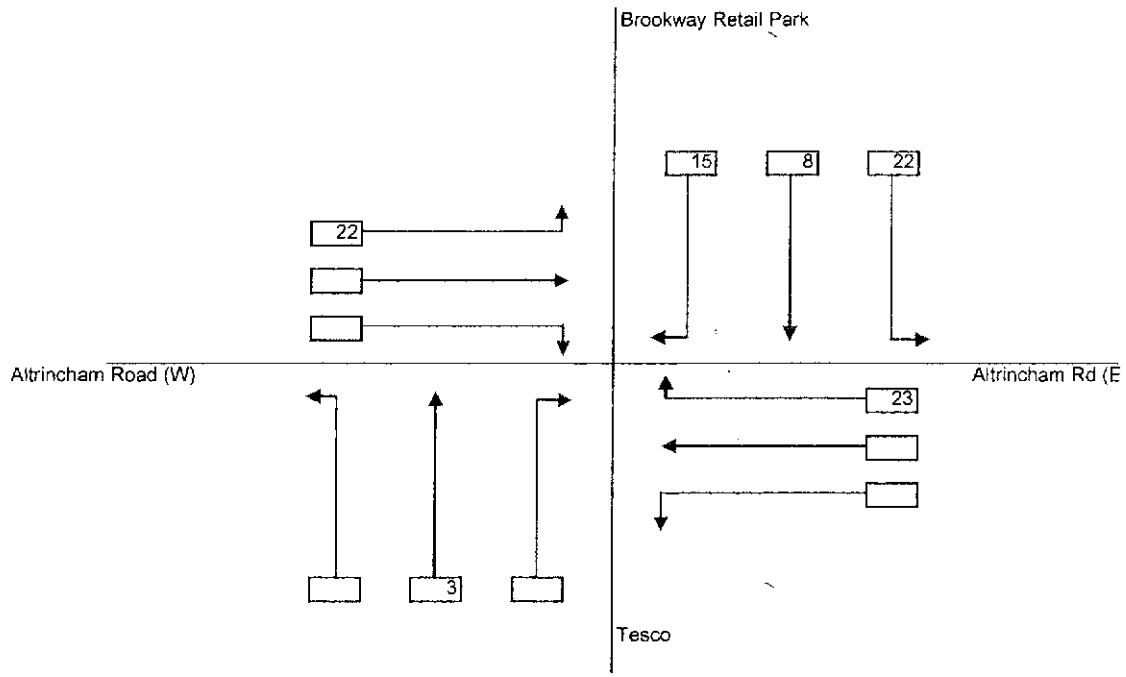

Weekday 1700-1800

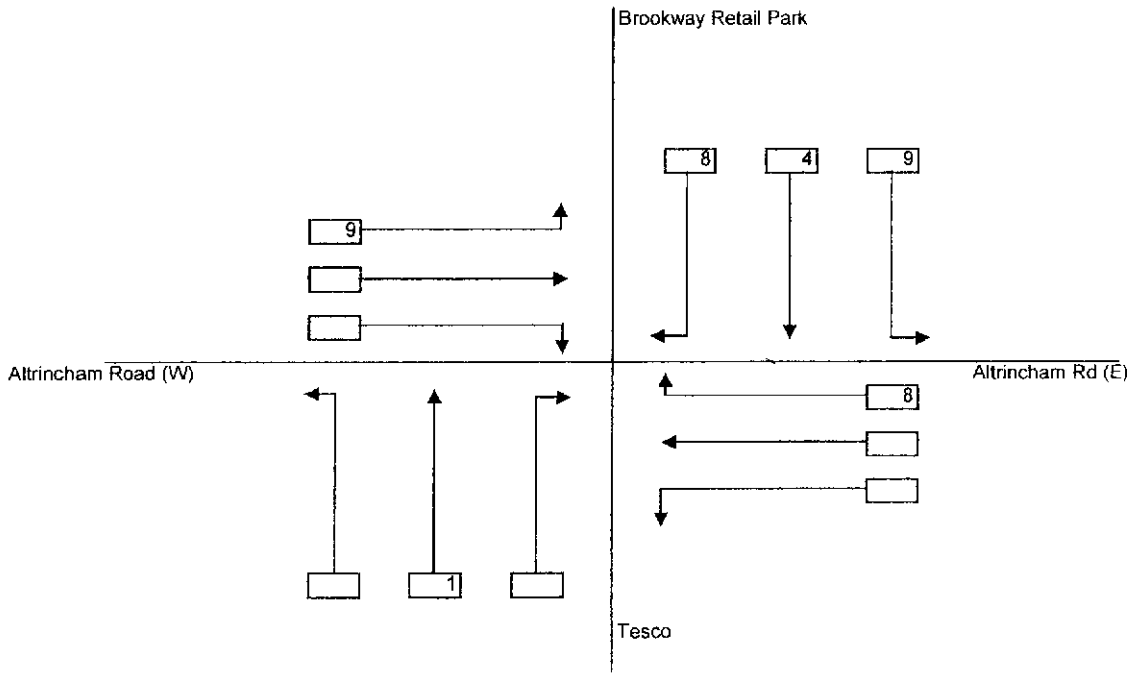

Figure 6	Drawing Title: Proposed retail Units Development Traffic			
Singleton Clamp & PARTNERS Consulting Engineers and Transportation Planners	Client: King Sturge	Job Title: Brookway Retail Park, Baguley		
	Date: June 2007	Scale: NTS	Drawn By: GD	Job No: 07181

FIGURE 7

Saturday 1500-1600

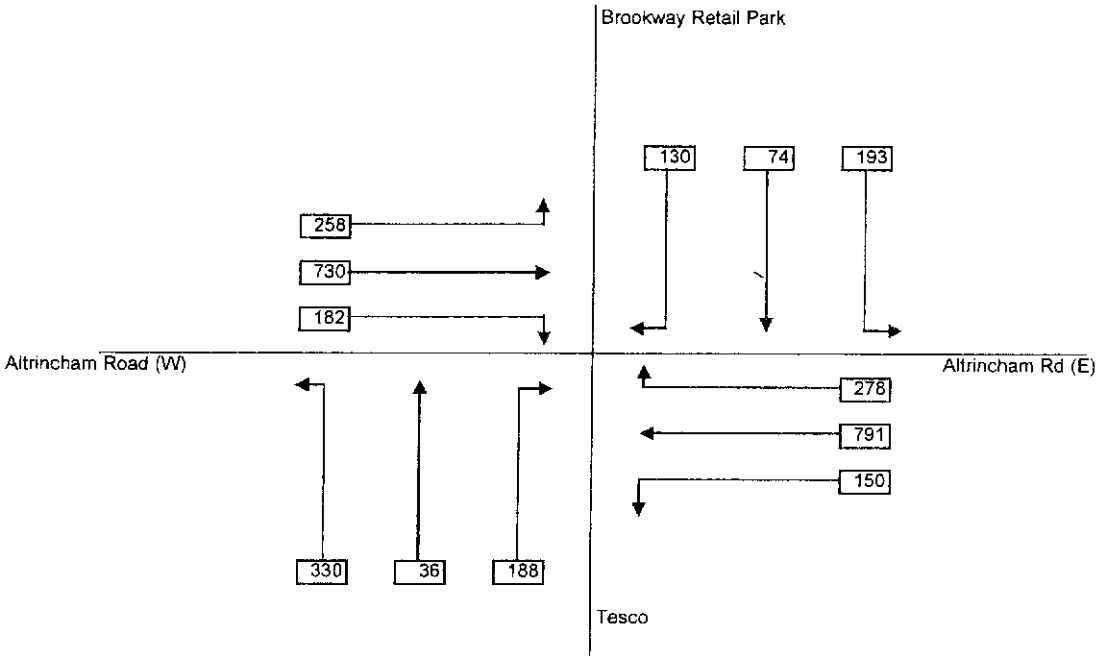

Weekday 1700-1800

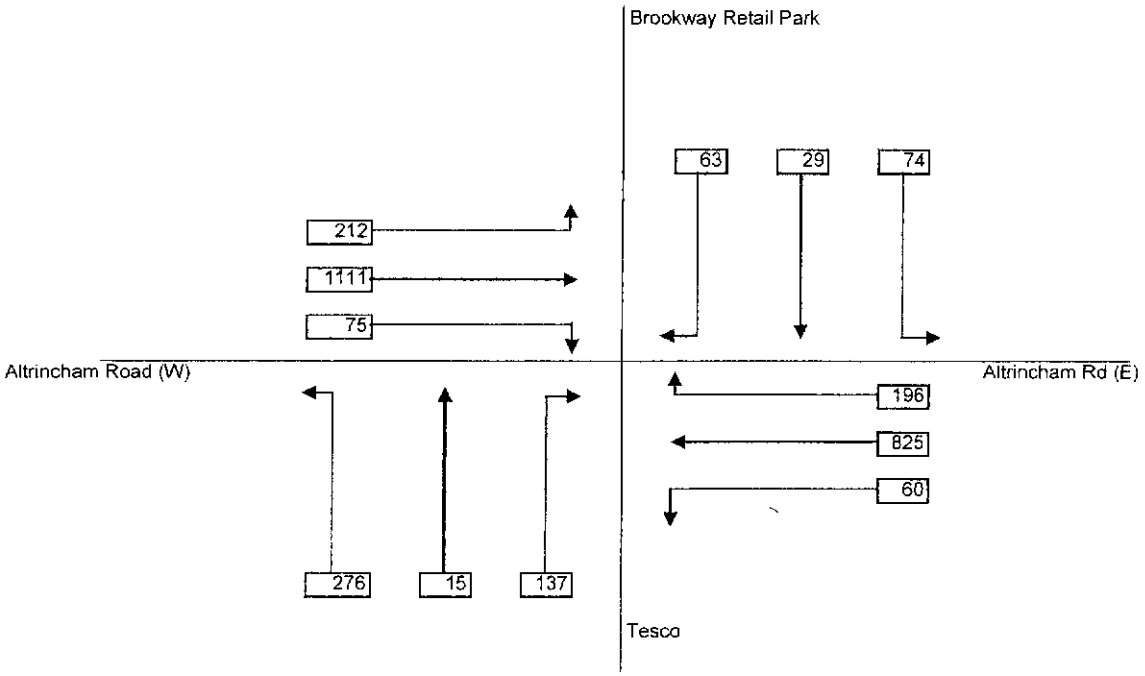

Figure 7	Drawing Title: Base 2008 plus Pets at Home committed traffic			
Singleton Clamp & Partners, Consulting Engineers and Transportation Planners	Client: King Sturge	Job Title: Brookway Retail Park, Baguley		
	Date: June 2007	Scale: NTS	Drawn By: GD	Job No: 07181

FIGURE 8

Saturday 1500-1600

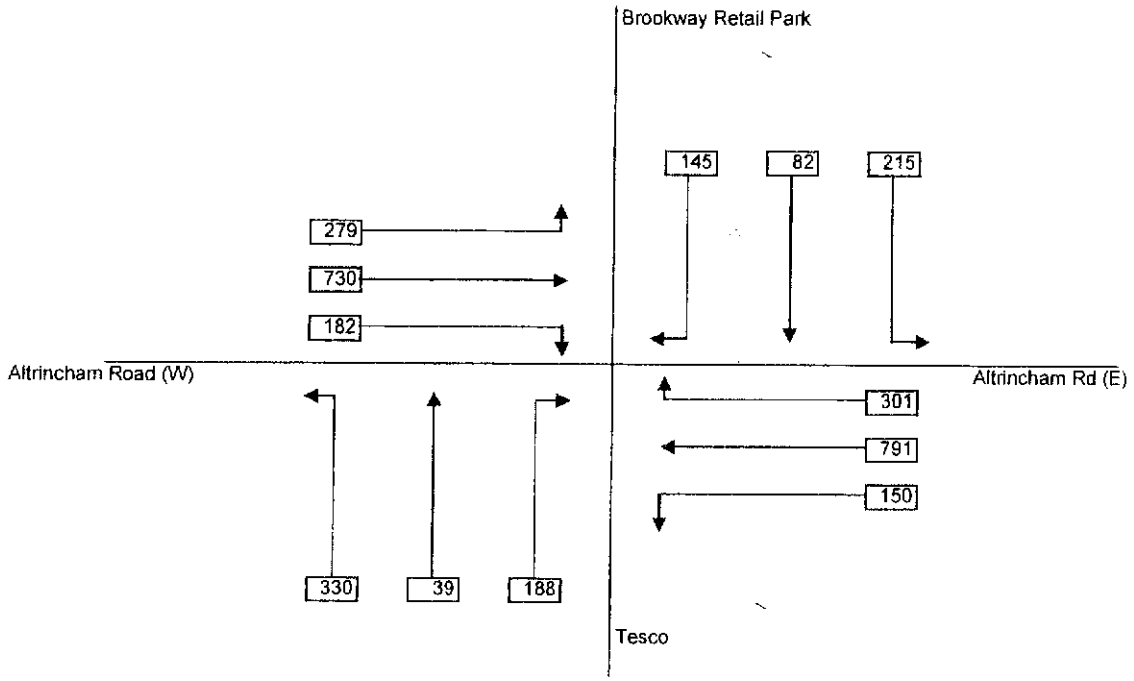

Weekday 1700-1800

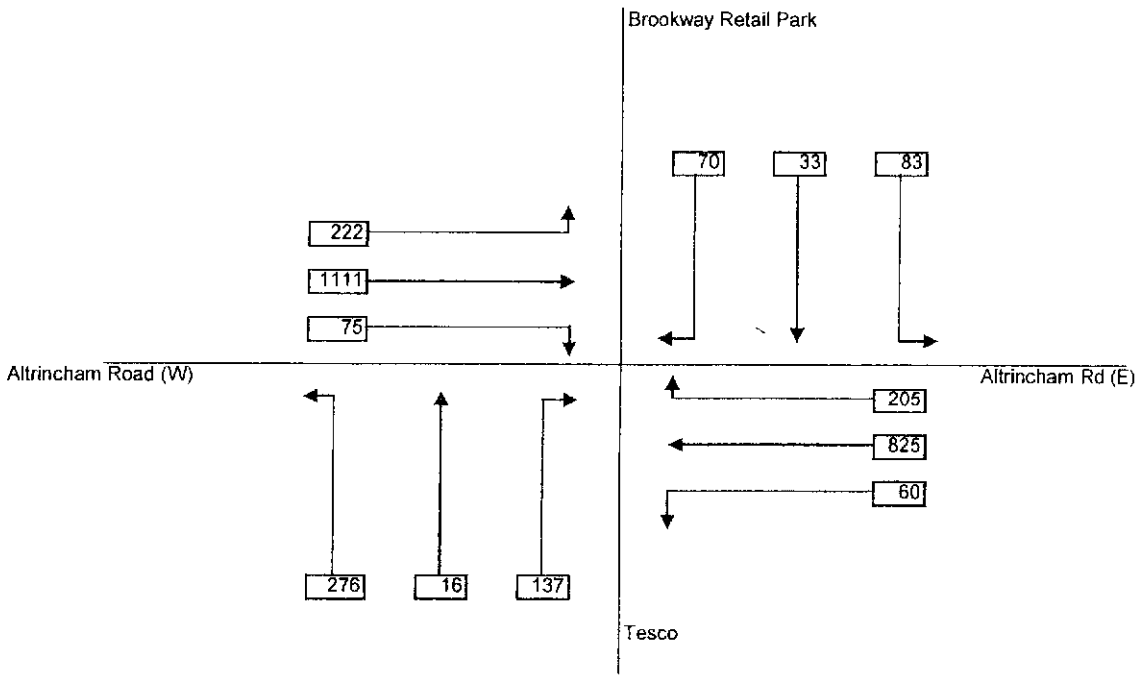

Figure 8	Drawing Title: Total Traffic Flows 2008			
Singleton Clamp & PARTNERS Consulting Engineers and Transportation Planners	Client: King Sturge	Job Title: Brookway Retail Park, Baguley		
	Date: June 2007	Scale: NTS	Drawn By: GD	Job No.: 07181

FIGURE 9

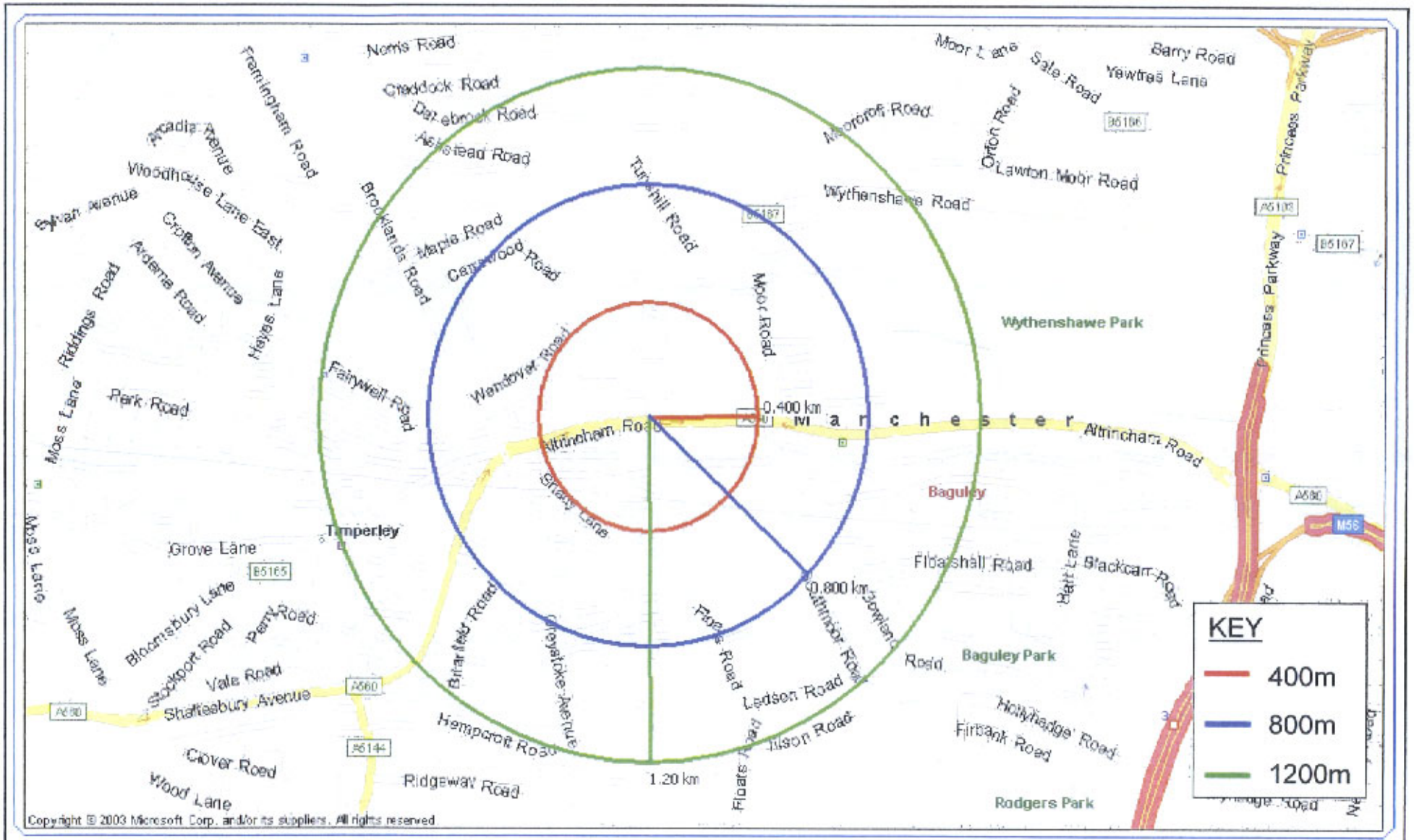

Figure 9	"Crow Fly" Walking Distance from Site	Singleton Clamp & PARTNERS
NTS	June 2007	07181 Brookway Retail Park, Baguley

Consulting Engineers and Transportation Planners

FIGURE 10

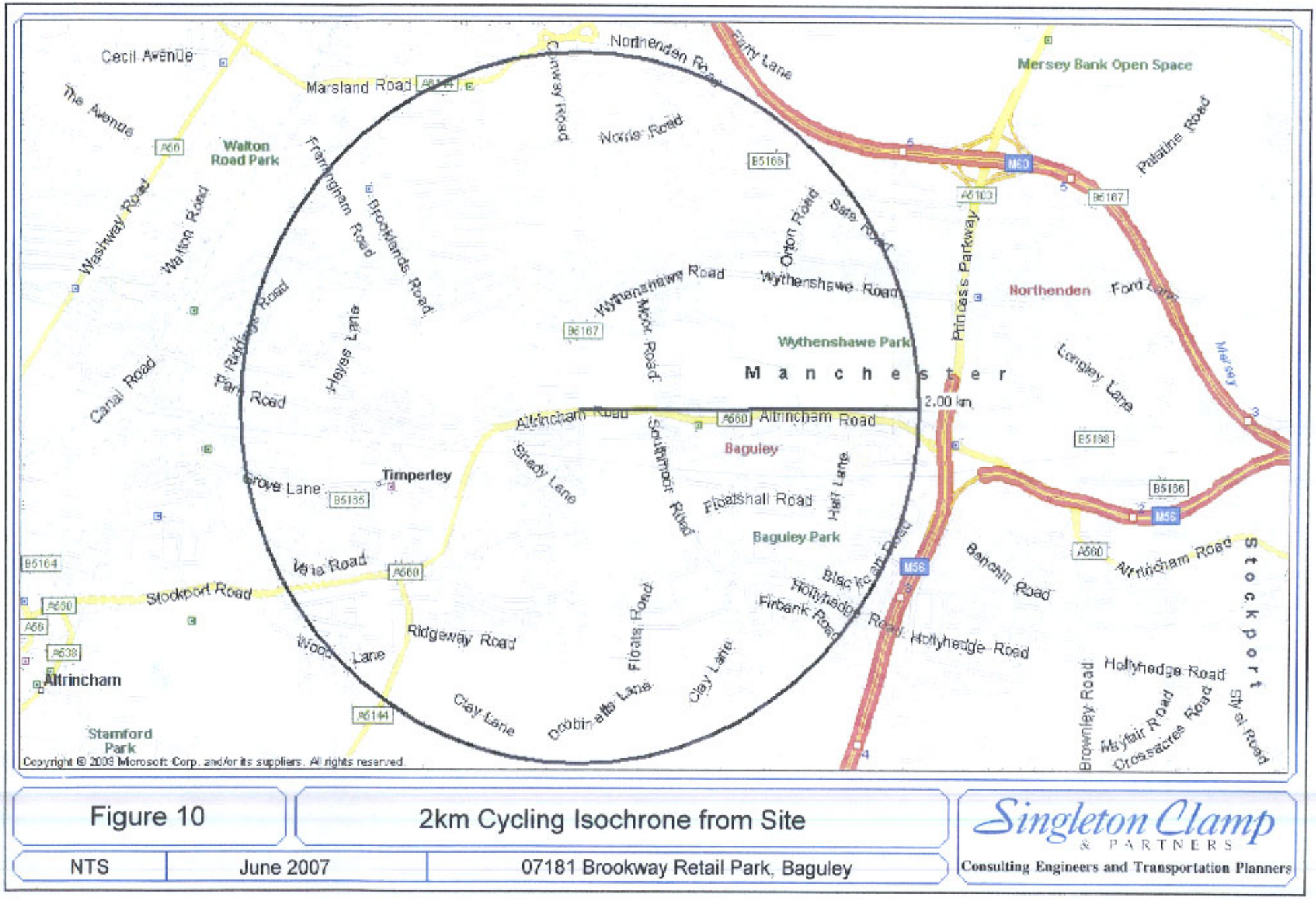

Figure 10	2km Cycling Isochrone from Site	
NTS	June 2007	07181 Brookway Retail Park, Baguley

Singleton Clamp & PARTNERS
Consulting Engineers and Transportation Planners

FIGURE 11

Bus Service Frequency serving Site

Service Number 11					
Destination	**Weekday / Weekend**	**First Service Commence**	**Last Service Commence**	**Frequency**	**Services Per Day**
Altrincham to Stockport	Monday - Friday	06:00	20:02	Every 10 minutes	71
	Saturday	06:27	20:02	Every 12 minutes	51
	Sunday	09:27	20:02	Every 20 minutes	30
Total Number of Services Per Week = 436					

Service Number 18 / 18A					
Destination	**Weekday / Weekend**	**First Service Commence**	**Last Service Commence**	**Frequency**	**Services Per Day**
Altrincham to The Trafford Centre	Monday - Friday	06:06	23:41	Every 30 minutes	32
	Saturday	06:11	23:41	Every 30 minutes	30
	Sunday	08:41	23:41	Every 60 minutes	15
Total Number of Services Per Week = 204					

Service Number 99					
Destination	**Weekday / Weekend**	**First Service Commence**	**Last Service Commence**	**Frequency**	**Services Per Day**
Sale to Manchester	Monday - Saturday	09:07	19:07	Every 60 minutes	11
	Sunday	09:56	16:56	Every 60 minutes	8
Total Number of Services Per Week = 74					

Service Number 103					
Destination	**Weekday / Weekend**	**First Service Commence**	**Last Service Commence**	**Frequency**	**Services Per Day**
Baguley to Manchester	Monday - Friday	10:05	14:05	Every 2 hours	3
Total Number of Services Per Week = 15					

Service Number 109					
Destination	**Weekday / Weekend**	**First Service Commence**	**Last Service Commence**	**Frequency**	**Services Per Day**
Altincham to Manchester	Monday - Friday	06:47	23:05	Every 30 minutes	28
	Saturday	07:23	23:05	Every 30 minutes	29
	Sunday	08:37	23:05	Every 60 minutes	17
Total Number of Services Per Week = 186					

Service Number 268					
Destination	**Weekday / Weekend**	**First Service Commence**	**Last Service Commence**	**Frequency**	**Services Per Day**
Trafford Hospital to Wythenshawe	Monday - Saturday	08:42	17:57	Every 60 minutes	11
Total Number of Services Per Week = 66					

Service Number 370 / 371					
Destination	**Weekday / Weekend**	**First Service Commence**	**Last Service Commence**	**Frequency**	**Services Per Day**
Altincham to Stockport	Monday - Friday	07:16	22:45	Every 30 minutes	28
	Saturday	07:45	22:45	Every 60 minutes	18
	Sunday	09:40	22:40	Every 60 minutes	14
Total Number of Services Per Week = 172					

	TOTAL COMBINED SERVICES PER DAY
MONDAY - FRIDAY	184
SATURDAY	150
SUNDAY	84

APPENDIX 1

Altrincham Road/Tesco/Brookway Retail Park Junction

Altrincham Road (e) **Saturday 16th June 2007**

	Left		St/on		Right		
Time	Car/Lgv	Hgv	Car/Lgv	Hgv	Car/Lgv	Hgv	Hrly Tots
14.00	38	0	190	4	70	0	
14.15	30	0	210	6	78	0	
14.30	41	0	196	2	72	0	
14.45	42	0	154	5	64	0	1202
15.00	34	0	202	3	83	0	
15.15	51	0	193	6	57	0	
15.30	33	0	191	6	67	0	
15.45	30	0	178	3	61	0	1198
Total	299	0	1514	35	552	0	2400
			Tuesday 19th June 2007				
17.00	22	0	200	7	41	0	
17.15	11	0	203	2	51	0	
17.30	17	0	174	6	53	0	
17.45	9	0	218	5	46	0	
Total	59	0	795	20	191	0	

	Max Queue		
Time	Left Ln	Middle Ln	Right Ln
14.00	10	12	8
14.15	11	14	12
14.30	10	12	9
14.45	10	9	8
15.00	12	10	15
15.15	8	11	10
15.30	9	12	10
15.45	8	8	9
	9	10	11
17.00	4	7	5
17.15	5	6	8
17.30	5	7	8
17.45	12	7	7
	7	7	7

Brookway Retail Park Access **Saturday 16th June 2007**

	Left		St/on		Right		
Time	Car/Lgv	Hgv	Car/Lgv	Hgv	Car/Lgv	Hgv	Hrly Tots
14.00	29	0	16	0	37	0	
14.15	37	0	16	0	25	0	
14.30	33	0	13	0	24	0	
14.45	58	0	17	0	22	0	327
15.00	48	0	18	0	30	0	
15.15	37	0	12	0	29	0	
15.30	40	0	29	0	44	0	
15.45	60	0	11	0	21	0	379
Total	342	0	132	0	232	0	706
			Tuesday 19th June 2007				
17.00	17	0	9	0	14	0	
17.15	29	0	10	0	16	0	
17.30	14	0	2	0	16	0	
17.45	10	0	7	0	14	0	
Total	70	0	28	0	60	0	

	Max Queue		
Time	Left Ln	Right Ln	
14.00	4	7	
14.15	4	5	
14.30	5	6	
14.45	7	8	
15.00	6	8	
15.15	6	7	
15.30	4	7	
15.45	6	5	
	6	7	
17.00	4	8	
17.15	3	4	
17.30	2	5	
17.45	2	5	
	3	6	

Vehicles Parked on Brookway Retail Park Car Park

14.00	161
15.00	191
16.00	175
17.00	70
18.00	60

APPENDIX 2

TRIP RATE CALCULATION SELECTION PARAMETERS:

Land Use : 01 - RETAIL
Category : K - RETAIL PARK - EXCLUDING FOOD

VEHICLES

Selected regions and areas:

02	**SOUTH EAST**		
	ES	EAST SUSSEX	1 days
	HC	HAMPSHIRE	2 days
	KC	KENT	1 days
06	**WEST MIDLANDS**		
	ST	STAFFORDSHIRE	1 days
	WM	WEST MIDLANDS	1 days
	WO	WORCESTERSHIRE	1 days
08	**NORTH WEST**		
	GM	GREATER MANCHESTER	3 days

Main parameter selection:

Parameter: Gross floor area
Range: 2057 to 35244 (units: sqm)

Date Range: 01/01/98 to 13/05/06

Selected survey days:

Monday	1 days
Thursday	3 days
Friday	6 days

Selected survey types:

Manual count	10 days
Directional ATC Count	0 days

TRIP RATE for Land Use 01 - RETAIL/K - RETAIL PARK - EXCLUDING FOOD

VEHICLES

Calculation factor: 100 sqm

BOLD print indicates peak (busiest) period

	ARRIVALS			DEPARTURES			TOTALS		
Time Range	No. Days	Ave. GFA	Trip Rate	No. Days	Ave. GFA	Trip Rate	No. Days	Ave. GFA	Trip Rate
00:00 - 01:00	0	0	0.000	0	0	0.000	0	0	0.000
01:00 - 02:00	0	0	0.000	0	0	0.000	0	0	0.000
02:00 - 03:00	0	0	0.000	0	0	0.000	0	0	0.000
03:00 - 04:00	0	0	0.000	0	0	0.000	0	0	0.000
04:00 - 05:00	0	0	0.000	0	0	0.000	0	0	0.000
05:00 - 06:00	0	0	0.000	0	0	0.000	0	0	0.000
06:00 - 07:00	0	0	0.000	0	0	0.000	0	0	0.000
07:00 - 08:00	3	13810	0.113	3	13810	0.048	3	13810	0.161
08:00 - 09:00	10	11180	0.519	10	11180	0.265	10	11180	0.784
09:00 - 10:00	10	11180	1.047	10	11180	0.680	10	11180	1.727
10:00 - 11:00	10	11180	1.325	10	11180	1.121	10	11180	2.446
11:00 - 12:00	10	11180	1.441	10	11180	1.292	10	11180	2.733
12:00 - 13:00	10	11180	1.718	10	11180	1.553	10	11180	3.271
13:00 - 14:00	**10**	**11180**	**1.780**	**10**	**11180**	**1.769**	**10**	**11180**	**3.549**
14:00 - 15:00	10	11180	1.585	10	11180	1.589	10	11180	3.174
15:00 - 16:00	10	11180	1.443	10	11180	1.501	10	11180	2.944
16:00 - 17:00	10	11180	1.355	10	11180	1.429	10	11180	2.784
17:00 - 18:00	10	11180	1.238	10	11180	1.316	10	11180	2.554
18:00 - 19:00	10	11180	1.437	10	11180	1.420	10	11180	2.857
19:00 - 20:00	10	11180	0.983	10	11180	1.547	10	11180	2.530
20:00 - 21:00	6	13045	0.396	6	13045	0.676	6	13045	1.072
21:00 - 22:00	3	13810	0.241	3	13810	0.584	3	13810	0.825
22:00 - 23:00	2	17788	0.037	2	17788	0.211	2	17788	0.248
23:00 - 24:00	0	0	0.000	0	0	0.000	0	0	0.000
Daily Trip Rates:			16.658			17.001			33.659

Parameter summary

Trip rate parameter range selected:	2057 - 35244 (units: sqm)
Survey date date range:	01/01/98 - 13/05/06
Number of weekdays (Monday-Friday):	10
Number of Saturdays:	0
Number of Sundays:	0
Optional parameters used in selection:	NO
Surveys manually removed from selection:	1

TRIP RATE CALCULATION SELECTION PARAMETERS:

Land Use : 01 - RETAIL
Category : K - RETAIL PARK - EXCLUDING FOOD
VEHICLES

Selected regions and areas:

02	**SOUTH EAST**		
	ES	EAST SUSSEX	1 days
	HC	HAMPSHIRE	1 days
	KC	KENT	1 days
04	**EAST ANGLIA**		
	SF	SUFFOLK	1 days
06	**WEST MIDLANDS**		
	ST	STAFFORDSHIRE	1 days
	WM	WEST MIDLANDS	1 days
	WO	WORCESTERSHIRE	2 days
08	**NORTH WEST**		
	GM	GREATER MANCHESTER	1 days
11	**SCOTLAND**		
	AD	ABERDEEN CITY	1 days
	MO	MORAY	1 days
	PK	PERTH & KINROSS	1 days
	SA	SOUTH AYRSHIRE	1 days

Main parameter selection:

Parameter: Gross floor area
Range: 2057 to 35244 (units: sqm)

Date Range: 01/01/98 to 13/05/06

Selected survey days:

Saturday	13 days

Selected survey types:

Manual count	13 days
Directional ATC Count	0 days

TRIP RATE for Land Use 01 - RETAIL/K - RETAIL PARK - EXCLUDING FOOD

VEHICLES

Calculation factor: 100 sqm

BOLD print indicates peak (busiest) period

	ARRIVALS			DEPARTURES			TOTALS		
Time Range	No. Days	Ave. GFA	Trip Rate	No. Days	Ave. GFA	Trip Rate	No. Days	Ave. GFA	Trip Rate
00:00 - 01:00	0	0	0.000	0	0	0.000	0	0	0.000
01:00 - 02:00	0	0	0.000	0	0	0.000	0	0	0.000
02:00 - 03:00	0	0	0.000	0	0	0.000	0	0	0.000
03:00 - 04:00	0	0	0.000	0	0	0.000	0	0	0.000
04:00 - 05:00	0	0	0.000	0	0	0.000	0	0	0.000
05:00 - 06:00	0	0	0.000	0	0	0.000	0	0	0.000
06:00 - 07:00	0	0	0.000	0	0	0.000	0	0	0.000
07:00 - 08:00	8	10815	0.091	8	10815	0.021	8	10815	0.112
08:00 - 09:00	13	10617	0.543	13	10617	0.262	13	10617	0.805
09:00 - 10:00	13	10617	1.348	13	10617	0.941	13	10617	2.289
10:00 - 11:00	13	10617	2.261	13	10617	1.824	13	10617	4.085
11:00 - 12:00	13	10617	2.804	13	10617	2.645	13	10617	5.449
12:00 - 13:00	13	10617	2.852	13	10617	2.758	13	10617	5.610
13:00 - 14:00	13	10617	2.949	13	10617	2.811	13	10617	5.760
14:00 - 15:00	**13**	**10617**	**3.353**	13	10617	3.092	**13**	**10617**	**6.445**
15:00 - 16:00	13	10617	3.049	**13**	**10617**	**3.135**	13	10617	6.184
16:00 - 17:00	13	10617	2.472	13	10617	2.934	13	10617	5.406
17:00 - 18:00	13	10617	1.656	13	10617	2.234	13	10617	3.890
18:00 - 19:00	13	10617	0.826	13	10617	1.272	13	10617	2.098
19:00 - 20:00	13	10617	0.388	13	10617	0.559	13	10617	0.947
20:00 - 21:00	5	13915	0.085	5	13915	0.103	5	13915	0.188
21:00 - 22:00	3	17398	0.105	3	17398	0.264	3	17398	0.369
22:00 - 23:00	2	17788	0.022	2	17788	0.084	2	17788	0.106
23:00 - 24:00	0	0	0.000	0	0	0.000	0	0	0.000
Daily Trip Rates:			24.804			24.939			49.743

Parameter summary

Trip rate parameter range selected:	2057 - 35244 (units: sqm)
Survey date date range:	01/01/98 - 13/05/06
Number of weekdays (Monday-Friday):	0
Number of Saturdays:	13
Number of Sundays:	0
Optional parameters used in selection:	NO
Surveys manually removed from selection:	1

APPENDIX 3

Saturday Base 2008

User and Project Details

Project:	**Brookway Retail Park**
Title:	**Site Access**
Location:	Baguley
File name:	Linsig site access.LSG
Author:	
Company:	
Address:	
Controller:	Generic
SCN:	
Notes:	

Phase Input Data

Phase Name	Phase type	Assoc Phase	Street Min	Cont Min
A	Traffic		7	7
B	Traffic		7	7
C	Traffic		7	7
D	Traffic		7	7
E	Traffic		7	7
F	Traffic		7	7
G	Filter	B	7	2

Intergreens

		Starting Phase						
		A	B	C	D	E	F	G
Terminating Phase	A		5	-	5	-	5	-
	B	5		5	-	5	5	-
	C	-	5		5	5	-	-
	D	6	-	5		5	6	-
	E	-	5	5	5		-	-
	F	5	5	-	5	-		-
	G	-	-	-	-	-	-	

Phase Delays

There are no phase delays defined in this stage stream

Prohibited Stage Changes

From Stage \ To Stage	1	2	3
1		6	6
2	5		5
3	5	X	

Stage Data

Stage No.	Phases in Stage
1	B D
2	A C
3	E F G

Link Input Data

Arm/ Link	Link Name	Link Type	Num Lanes	Phases	Start Disp.	End Disp.
1/1	Altrincham Rd East Right	U	1	E	2	3
1/2	Altrincham Rd East Ahead	U	2	A	2	3
1/3	Altrincham Rd East Left	U	1	A	2	3
2/1	Tesco Access Ahead Right	O	1	B	2	3
2/2	Tesco Access Left	O	1	B G	2	3
3/1	Altrincham Rd West Left Ahead	U	3	C	2	3
3/2	Altrincham Rd West Right	U	1	F	2	3
4/1	Brookway Retail Park Ahead Right	O	1	D	2	3
4/2	Brookway Retail Park Left	U	1	D	2	3
5/1		U	1		2	3
6/1		U	2		2	3
7/1		U	1		2	3
8/1		U	2		2	3

Opposed Link Data

Arm/ Link	Link Name	Max Flow When Giving Way (PCU/Hr)	Opp. Link 1	Opp. Link 1 Coeff.	Opp. Link 2	Opp. Link 2 Coeff.	Right Turn Storage (PCU)	Non-Blocking Storage (PCU)	RTF	Right Turn Move up time (s)	Max Turns in Intergreen (PCU)
2/1	Tesco Access Ahead Right	1400	4/1	1.09	4/2	1.09	1.00	0.00	0.50	1	2.00
2/2	Tesco Access Left	715	4/1	0.22			2.00	2.00	0.50	2	2.00
4/1	Brookway Retail Park Ahead Right	1400	2/1	1.09			1.00	0.00	0.50	1	2.00

Lane Input Data

Arm/ Lane	Actual Length (PCU)	Effective Length (PCU)	Sat Flow Type	User Saturation Flow (PCU/Hr)	Lane Width (m)	Gradient	Nearside Lane	Allowed Turns	Turning Radius (m)
1/1 (Altrincham Rd East Lane 1)	Inf	Inf	Geom	1800	3.50	0.00	Y	Arm 7 Left	Inf
1/2 (Altrincham Rd East Lane 2)	Inf	Inf	Geom	1800	3.55	0.00	Y	Arm 8 Ahead	Inf
1/3 (Altrincham Rd East Lane 3)	Inf	Inf	Geom	1800	3.55	0.00	N	Arm 8 Ahead	Inf
1/4 (Altrincham Rd East Lane 4)	Inf	Inf	Geom	1800	3.50	0.00	Y	Arm 5 Right	15.00
2/1 (Tesco Access Lane 1)	Inf	Inf	Geom	1800	4.00	0.00	Y	Arm 8 Left	12.00
2/2 (Tesco Access Lane 2)	Inf	Inf	Geom	1800	5.00	0.00	Y	Arm 5 Ahead	Inf
								Arm 6 Right	15.00
3/1 (Altrincham Rd West Lane 1)	5	1	Geom	1800	3.25	0.00	Y	Arm 5 Left	10.00
3/2 (Altrincham Rd West Lane 2)	Inf	Inf	Geom	1800	4.00	0.00	Y	Arm 6 Ahead	Inf
3/3 (Altrincham Rd West Lane 3)	Inf	Inf	Geom	1800	4.00	0.00	Y	Arm 6 Ahead	Inf
3/4 (Altrincham Rd West Lane 4)	Inf	Inf	Geom	1800	3.50	0.00	Y	Arm 7 Right	15.00
4/1 (Brookway Retail Park Lane 1)	Inf	Inf	Geom	1800	5.00	0.00	Y	Arm 6 Left	18.00
4/2 (Brookway Retail Park Lane 2)	Inf	Inf	Geom	1800	4.00	0.00	Y	Arm 7 Ahead	Inf
								Arm 8 Right	14.00
5/1	Inf	Inf	Geom	1800	5.00	0.00	Y		

6/1	Inf	Inf	Geom	1800	3.25	0.00	Y		
6/2	Inf	Inf	Geom	1800	3.25	0.00	N		
7/1	Inf	Inf	Geom	1800	5.00	0.00	Y		
8/1	Inf	Inf	Geom	1800	3.25	0.00	Y		
8/2	Inf	Inf	Geom	1800	3.25	0.00	N		

Lane Saturation Flows

Flow Group 2: ' Saturday Base 2008'

Arm/ Lane	Lane Width (m)	Gradient	Nearside Lane	Allowed Turns	Turning Radius (m)	Turning Prop.	Sat flow (PCU/Hr)
1/1 (Altrincham Rd East Lane 1)	3.50	0.00	Y	Arm 7 Left	Inf	100.0 %	1965
1/2 (Altrincham Rd East Lane 2)	3.55	0.00	Y	Arm 8 Ahead	Inf	100.0 %	1970
1/3 (Altrincham Rd East Lane 3)	3.55	0.00	N	Arm 8 Ahead	Inf	100.0 %	2110
1/4 (Altrincham Rd East Lane 4)	3.50	0.00	Y	Arm 5 Right	15.00	100.0 %	1786
2/1 (Tesco Access Lane 1)	4.00	0.00	Y	Arm 8 Left	12.00	100.0 %	1791
2/2 (Tesco Access Lane 2)	5.00	0.00	Y	Arm 5 Ahead	Inf	16.1 %	1951
				Arm 6 Right	15.00	83.9 %	
3/1 (Altrincham Rd West Lane 1)	3.25	0.00	Y	Arm 5 Left	10.00	100.0 %	1687
3/2 (Altrincham Rd West Lane 2)	4.00	0.00	Y	Arm 6 Ahead	Inf	100.0 %	2015
3/3 (Altrincham Rd West Lane 3)	4.00	0.00	Y	Arm 6 Ahead	Inf	100.0 %	2015
3/4 (Altrincham Rd West Lane 4)	3.50	0.00	Y	Arm 7 Right	15.00	100.0 %	1786
4/1 (Brookway Retail Park Lane 1)	5.00	0.00	Y	Arm 6 Left	18.00	100.0 %	1952
4/2 (Brookway Retail Park Lane 2)	4.00	0.00	Y	Arm 7 Ahead	Inf	36.3 %	1886
				Arm 8 Right	14.00	63.7 %	
5/1	5.00	0.00	Y				2115
6/1	3.25	0.00	Y				1940
6/2	3.25	0.00	N				2080
7/1	5.00	0.00	Y				2115
8/1	3.25	0.00	Y				1940
8/2	3.25	0.00	N				2080

Traffic Flow Groups Data

Flow Group	Start Time	End Time	Duration	Formula
2: ' Saturday Base 2008'	14:00	15:00	01:00	

Traffic Flow Matrix

Flow Group 2: ' Saturday Base 2008'

Desired Flow :

		Destination				
		A	B	C	D	Tot.
Origin	A	0	150	791	278	1219
	B	188	0	330	36	554
	C	730	182	0	258	1170
	D	193	74	130	0	397
	Tot.	1111	406	1251	572	3340

Signal Plans Data

Stage	1	2	3
Duration	31	26	17
Change Point	0	36	68

Link Results

Flow Group 2: ' Saturday Base 2008'

Link Num	Link Desc	Link Type	Stage Stream	Position In Filtered Route	Full Phase	Arrow Phase	Num Greens	Total Green (s)	Arrow Green (s)	Demand Flow (pcu)	Max Sat Flow (pcu/Hr)	Ave Sat Flow (pcu/Hr)	Capacity (pcu)	Deg Sat (%)
1/1	Altrincham Rd East Right	U	N/A	N/A	E		1	17	-	278	1786	1786	357	77.8
1/2	Altrincham Rd East Ahead	U	N/A	N/A	A		1	26	-	791	4080	4080	1224	64.6
1/3	Altrincham Rd East Left	U	N/A	N/A	A		1	26	-	150	1965	1965	589	25.4
2/1	Tesco Access Ahead Right	O	N/A	N/A	B		1	31	-	224	1951	804	286	78.4
2/2	Tesco Access Left	O	N/A	N/A	B	G	1	58	27	330	1791	1277	837	39.4
3/1	Altrincham Rd West Left Ahead	U	N/A	N/A	C		1	27	-	988	5717	4159	1294	76.4
3/2	Altrincham Rd West Right	U	N/A	N/A	F		1	17	-	182	1786	1786	357	51.0
4/1	Brookway Retail Park Ahead Right	O	N/A	N/A	D		1	31	-	204	1886	1014	361	56.6
4/2	Brookway Retail Park Left	U	N/A	N/A	D		1	31	-	193	1952	1952	694	27.8

LINSIG V1 style report

Link Num	Entering (pcu)	Leaving (pcu)	Turners In Gaps (pcu)	Turners When Unopposed (pcu)	Turners In Intergreen (pcu)	Uniform Delay (pcuHr)	Rand + Oversat Delay (pcuHr)	Storage Area Uniform Delay (pcuHr)	Total Delay (pcuHr)	Av. Delay Per Veh (s/pcu)	Max. Back of Uniform Queue (pcu)	Rand + Oversat Queue (pcu)	Mean Max Queue (pcu)
1/1	278	278	-	-	-	2.6	1.7	-	4.3	55.9	6.6	1.7	8.2
1/2	791	791	-	-	-	6.0	0.9	-	6.9	31.5	17.1	0.9	18.0
1/3	150	150	-	-	-	1.0	0.2	-	1.2	28.0	2.8	0.2	3.0
2/1	224	224	186	0	2	1.8	1.7	0.2	3.8	60.4	5.2	1.7	6.9
2/2	330	330	95	235	0	0.6	0.3	-	0.9	10.1	3.5	0.3	3.8
3/1	988	988	-	-	-	7.6	1.6	-	9.2	33.4	22.0	1.6	23.6
3/2	182	182	-	-	-	1.6	0.5	-	2.1	42.3	4.0	0.5	4.6
4/1	204	204	129	0	1	1.2	0.6	0.0	1.9	33.3	3.7	0.6	4.4
4/2	193	193	-	-	-	1.1	0.2	-	1.3	24.3	3.4	0.2	3.6

PRC for Signalled Links (%): 14.8 Total Delay for Signalled Links (pcuHr): 31.58
PRC Over All Links (%): 14.8 Total Delay Over All Links(pcuHr): 32.30 Cycle Time (s): 90

Weekday Base 2008

User and Project Details

Project:	**Brookway Retail Park**
Title:	**Site Access**
Location:	Baguley
File name:	Linsig site access.LSG
Author:	
Company:	
Address:	
Controller:	Generic
SCN:	
Notes:	

Phase Input Data

Phase Name	Phase type	Assoc Phase	Street Min	Cont Min
A	Traffic		45	45
B	Traffic		7	7
C	Traffic		45	45
D	Traffic		7	7
E	Traffic		7	7
F	Traffic		7	7
G	Filter	B	7	2

Intergreens

		Starting Phase						
		A	B	C	D	E	F	G
Terminating Phase	A		5	-	5	-	5	-
	B	5		5	-	5	5	-
	C	-	5		5	5	-	-
	D	6	-	5		5	6	-
	E	-	5	5	5		-	-
	F	5	5	-	5	-		-
	G	-	-	-	-	-	-	

Phase Delays

There are no phase delays defined in this stage stream

Prohibited Stage Changes

From Stage \ To Stage	1	2	3
1		6	6
2	5		5
3	5	X	

Stage Data

Stage No.	Phases in Stage
1	B D
2	A C
3	E F G

Link Input Data

Arm/ Link	Link Name	Link Type	Num Lanes	Phases	Start Disp.	End Disp.
1/1	Altrincham Rd East Right	U	1	E	2	3
1/2	Altrincham Rd East Ahead	U	2	A	2	3
1/3	Altrincham Rd East Left	U	1	A	2	3
2/1	Tesco Access Ahead Right	O	1	B	2	3
2/2	Tesco Access Left	O	1	B G	2	3
3/1	Altrincham Rd West Left Ahead	U	3	C	2	3
3/2	Altrincham Rd West Right	U	1	F	2	3
4/1	Brookway Retail Park Ahead Right	O	1	D	2	3
4/2	Brookway Retail Park Left	U	1	D	2	3
5/1		U	1		2	3
6/1		U	2		2	3
7/1		U	1		2	3
8/1		U	2		2	3

Opposed Link Data

Arm/ Link	Link Name	Max Flow When Giving Way (PCU/Hr)	Opp. Link 1	Opp. Link 1 Coeff.	Opp. Link 2	Opp. Link 2 Coeff.	Right Turn Storage (PCU)	Non-Blocking Storage (PCU)	RTF	Right Turn Move up time (s)	Max Turns in Intergreen (PCU)
2/1	Tesco Access Ahead Right	1400	4/1	1.09	4/2	1.09	1.00	0.00	0.50	1	2.00
2/2	Tesco Access Left	715	4/1	0.22			2.00	2.00	0.50	2	2.00
4/1	Brookway Retail Park Ahead Right	1400	2/1	1.09			1.00	0.00	0.50	1	2.00

Lane Input Data

Arm/ Lane	Actual Length (PCU)	Effective Length (PCU)	Sat Flow Type	User Saturation Flow (PCU/Hr)	Lane Width (m)	Gradient	Nearside Lane	Allowed Turns	Turning Radius (m)
1/1 (Altrincham Rd East Lane 1)	Inf	Inf	Geom	1800	3.50	0.00	Y	Arm 7 Left	Inf
1/2 (Altrincham Rd East Lane 2)	Inf	Inf	Geom	1800	3.55	0.00	Y	Arm 8 Ahead	Inf
1/3 (Altrincham Rd East Lane 3)	Inf	Inf	Geom	1800	3.55	0.00	N	Arm 8 Ahead	Inf
1/4 (Altrincham Rd East Lane 4)	Inf	Inf	Geom	1800	3.50	0.00	Y	Arm 5 Right	15.00
2/1 (Tesco Access Lane 1)	Inf	Inf	Geom	1800	4.00	0.00	Y	Arm 8 Left	12.00
2/2 (Tesco Access Lane 2)	Inf	Inf	Geom	1800	5.00	0.00	Y	Arm 5 Ahead Arm 6 Right	Inf 15.00
3/1 (Altrincham Rd West Lane 1)	5	1	Geom	1800	3.25	0.00	Y	Arm 5 Left	10.00
3/2 (Altrincham Rd West Lane 2)	Inf	Inf	Geom	1800	4.00	0.00	Y	Arm 6 Ahead	Inf
3/3 (Altrincham Rd West Lane 3)	Inf	Inf	Geom	1800	4.00	0.00	Y	Arm 6 Ahead	Inf
3/4 (Altrincham Rd West Lane 4)	Inf	Inf	Geom	1800	3.50	0.00	Y	Arm 7 Right	15.00
4/1 (Brookway Retail Park Lane 1)	Inf	Inf	Geom	1800	5.00	0.00	Y	Arm 6 Left	18.00
4/2 (Brookway Retail Park Lane 2)	Inf	Inf	Geom	1800	4.00	0.00	Y	Arm 7 Ahead Arm 8 Right	Inf 14.00
5/1	Inf	Inf	Geom	1800	5.00	0.00	Y		

6/1	Inf	Inf	Geom	1800	3.25	0.00	Y		
6/2	Inf	Inf	Geom	1800	3.25	0.00	N		
7/1	Inf	Inf	Geom	1800	5.00	0.00	Y		
8/1	Inf	Inf	Geom	1800	3.25	0.00	Y		
8/2	Inf	Inf	Geom	1800	3.25	0.00	N		

Lane Saturation Flows

Flow Group 1: 'Weekday Base 2008'

Arm/ Lane	Lane Width (m)	Gradient	Nearside Lane	Allowed Turns	Turning Radius (m)	Turning Prop.	Sat flow (PCU/Hr)
1/1 (Altrincham Rd East Lane 1)	3.50	0.00	Y	Arm 7 Left	Inf	100.0 %	1965
1/2 (Altrincham Rd East Lane 2)	3.55	0.00	Y	Arm 8 Ahead	Inf	100.0 %	1970
1/3 (Altrincham Rd East Lane 3)	3.55	0.00	N	Arm 8 Ahead	Inf	100.0 %	2110
1/4 (Altrincham Rd East Lane 4)	3.50	0.00	Y	Arm 5 Right	15.00	100.0 %	1786
2/1 (Tesco Access Lane 1)	4.00	0.00	Y	Arm 8 Left	12.00	100.0 %	1791
2/2 (Tesco Access Lane 2)	5.00	0.00	Y	Arm 5 Ahead	Inf	9.9 %	1940
				Arm 6 Right	15.00	90.1 %	
3/1 (Altrincham Rd West Lane 1)	3.25	0.00	Y	Arm 5 Left	10.00	100.0 %	1687
3/2 (Altrincham Rd West Lane 2)	4.00	0.00	Y	Arm 6 Ahead	Inf	100.0 %	2015
3/3 (Altrincham Rd West Lane 3)	4.00	0.00	Y	Arm 6 Ahead	Inf	100.0 %	2015
3/4 (Altrincham Rd West Lane 4)	3.50	0.00	Y	Arm 7 Right	15.00	100.0 %	1786
4/1 (Brookway Retail Park Lane 1)	5.00	0.00	Y	Arm 6 Left	18.00	100.0 %	1952
4/2 (Brookway Retail Park Lane 2)	4.00	0.00	Y	Arm 7 Ahead	Inf	31.5 %	1877
				Arm 8 Right	14.00	68.5 %	
5/1	5.00	0.00	Y				2115
6/1	3.25	0.00	Y				1940
6/2	3.25	0.00	N				2080
7/1	5.00	0.00	Y				2115
8/1	3.25	0.00	Y				1940
8/2	3.25	0.00	N				2080

Traffic Flow Groups Data

Flow Group	Start Time	End Time	Duration	Formula
1: 'Weekday Base 2008'	17:00	18:00	01:00	

Traffic Flow Matrix

Flow Group 1: 'Weekday Base 2008'

Desired Flow :

		Destination				
		A	B	C	D	Tot.
Origin	A	0	60	825	196	1081
	B	137	0	276	15	428
	C	1111	75	0	212	1398
	D	74	29	63	0	166
	Tot.	1322	164	1164	423	3073

Signal Plans Data

Stage	1	2	3
Duration	18	45	11
Change Point	0	23	74

Link Results
Flow Group 1: 'Weekday Base 2008'

Link Num	Link Desc	Link Type	Stage Stream	Position In Filtered Route	Full Phase	Arrow Phase	Num Greens	Total Green (s)	Arrow Green (s)	Demand Flow (pcu)	Max Sat Flow (pcu/Hr)	Ave Sat Flow (pcu/Hr)	Capacity (pcu)	Deg Sat (%)
1/1	Altrincham Rd East Right	U	N/A	N/A	E		1	11	-	196	1786	1786	238	82.3
1/2	Altrincham Rd East Ahead	U	N/A	N/A	A		1	45	-	825	4080	4080	2085	39.6
1/3	Altrincham Rd East Left	U	N/A	N/A	A		1	45	-	60	1965	1965	1004	6.0
2/1	Tesco Access Ahead Right	O	N/A	N/A	B		1	18	-	152	1940	936	198	76.9
2/2	Tesco Access Left	O	N/A	N/A	B	G	1	39	21	276	1791	1413	628	44.0
3/1	Altrincham Rd West Left Ahead	U	N/A	N/A	C		1	46	-	1323	5717	4107	2145	61.7
3/2	Altrincham Rd West Right	U	N/A	N/A	F		1	11	-	75	1786	1786	238	31.5
4/1	Brookway Retail Park Ahead Right	O	N/A	N/A	D		1	18	-	92	1877	929	196	46.9
4/2	Brookway Retail Park Left	U	N/A	N/A	D		1	18	-	74	1952	1952	412	18.0

Link Num	Entering (pcu)	Leaving (pcu)	Turners In Gaps (pcu)	Turners When Unopposed (pcu)	Turners In Intergreen (pcu)	Uniform Delay (pcuHr)	Rand + Oversat Delay (pcuHr)	Storage Area Uniform Delay (pcuHr)	Total Delay (pcuHr)	Av. Delay Per Veh (s/pcu)	Max. Back of Uniform Queue (pcu)	Rand + Oversat Queue (pcu)	Mean Max Queue (pcu)
1/1	196	196	-	-	-	2.1	2.1	-	4.2	76.8	4.7	2.1	6.9
1/2	825	825	-	-	-	3.1	0.3	-	3.4	14.9	12.6	0.3	12.9
1/3	60	60	-	-	-	0.2	0.0	-	0.2	13.0	0.8	0.0	0.8
2/1	152	152	135	0	2	1.5	1.6	0.1	3.2	75.0	3.6	1.6	5.2
2/2	276	276	40	236	0	1.3	0.4	-	1.7	21.5	4.5	0.4	4.9
3/1	1323	1323	-	-	-	5.4	0.8	-	6.2	16.9	22.8	0.8	23.6
3/2	75	75	-	-	-	0.7	0.2	-	1.0	46.3	1.7	0.2	1.9
4/1	92	92	62	0	1	0.8	0.4	0.0	1.2	47.5	1.9	0.4	2.4
4/2	74	74	-	-	-	0.6	0.1	-	0.7	34.5	1.5	0.1	1.6

PRC for Signalled Links (%): 9.3 Total Delay for Signalled Links (pcuHr): 21.73
PRC Over All Links (%): 9.3 Total Delay Over All Links(pcuHr): 22.34 Cycle Time (s): 90

APPENDIX 4

Saturday Total 2008

User and Project Details

Project:	**Brookway Business Park**
Title:	**Site Access**
Location:	Baguley
File name:	Linsig site access.LSG
Author:	
Company:	
Address:	
Controller:	Generic
SCN:	
Notes:	

Phase Input Data

Phase Name	Phase type	Assoc Phase	Street Min	Cont Min
A	Traffic		7	7
B	Traffic		7	7
C	Traffic		7	7
D	Traffic		7	7
E	Traffic		7	7
F	Traffic		7	7
G	Filter	B	7	2

Intergreens

		Starting Phase						
		A	B	C	D	E	F	G
Terminating Phase	A		5	-	5	-	5	-
	B	5		5	-	5	5	-
	C	-	5		5	5	-	-
	D	6	-	5		5	6	-
	E	-	5	5	5		-	-
	F	5	5	-	5	-		-
	G	-	-	-	-	-	-	

Phase Delays

There are no phase delays defined in this stage stream

Prohibited Stage Changes

From Stage \ To Stage	1	2	3
1		6	6
2	5		5
3	5	X	

Stage Data

Stage No.	Phases in Stage
1	B D
2	A C
3	E F G

Link Input Data

Arm/ Link	Link Name	Link Type	Num Lanes	Phases	Start Disp.	End Disp.
1/1	Altrincham Rd East Right	U	1	E	2	3
1/2	Altrincham Rd East Ahead	U	2	A	2	3
1/3	Altrincham Rd East Left	U	1	A	2	3
2/1	Tesco Access Ahead Right	O	1	B	2	3
2/2	Tesco Access Left	O	1	B G	2	3
3/1	Altrincham Rd West Left Ahead	U	3	C	2	3
3/2	Altrincham Rd West Right	U	1	F	2	3
4/1	Brookway Retail Park Ahead Right	O	1	D	2	3
4/2	Brookway Retail Park Left	U	1	D	2	3
5/1		U	1		2	3
6/1		U	2		2	3
7/1		U	1		2	3
8/1		U	2		2	3

Opposed Link Data

Arm/ Link	Link Name	Max Flow When Giving Way (PCU/Hr)	Opp. Link 1	Opp. Link 1 Coeff.	Opp. Link 2	Opp. Link 2 Coeff.	Right Turn Storage (PCU)	Non-Blocking Storage (PCU)	RTF	Right Turn Move up time (s)	Max Turns in Intergreen (PCU)
2/1	Tesco Access Ahead Right	1400	4/1	1.09	4/2	1.09	1.00	0.00	0.50	1	2.00
2/2	Tesco Access Left	715	4/1	0.22			2.00	2.00	0.50	2	2.00
4/1	Brookway Retail Park Ahead Right	1400	2/1	1.09			1.00	0.00	0.50	1	2.00

Lane Input Data

Arm/ Lane	Actual Length (PCU)	Effective Length (PCU)	Sat Flow Type	User Saturation Flow (PCU/Hr)	Lane Width (m)	Gradient	Nearside Lane	Allowed Turns	Turning Radius (m)
1/1 (Altrincham Rd East Lane 1)	Inf	Inf	Geom	1800	3.50	0.00	Y	Arm 7 Left	Inf
1/2 (Altrincham Rd East Lane 2)	Inf	Inf	Geom	1800	3.55	0.00	Y	Arm 8 Ahead	Inf
1/3 (Altrincham Rd East Lane 3)	Inf	Inf	Geom	1800	3.55	0.00	N	Arm 8 Ahead	Inf
1/4 (Altrincham Rd East Lane 4)	Inf	Inf	Geom	1800	3.50	0.00	Y	Arm 5 Right	15.00
2/1 (Tesco Access Lane 1)	Inf	Inf	Geom	1800	4.00	0.00	Y	Arm 8 Left	12.00
2/2 (Tesco Access Lane 2)	Inf	Inf	Geom	1800	5.00	0.00	Y	Arm 5 Ahead Arm 6 Right	Inf 15.00
3/1 (Altrincham Rd West Lane 1)	5	1	Geom	1800	3.25	0.00	Y	Arm 5 Left	10.00
3/2 (Altrincham Rd West Lane 2)	Inf	Inf	Geom	1800	4.00	0.00	Y	Arm 6 Ahead	Inf
3/3 (Altrincham Rd West Lane 3)	Inf	Inf	Geom	1800	4.00	0.00	Y	Arm 6 Ahead	Inf
3/4 (Altrincham Rd West Lane 4)	Inf	Inf	Geom	1800	3.50	0.00	Y	Arm 7 Right	15.00
4/1 (Brookway Retail Park Lane 1)	Inf	Inf	Geom	1800	5.00	0.00	Y	Arm 6 Left	18.00
4/2 (Brookway Retail Park Lane 2)	Inf	Inf	Geom	1800	4.00	0.00	Y	Arm 7 Ahead Arm 8 Right	Inf 14.00
5/1	Inf	Inf	Geom	1800	5.00	0.00	Y		

6/1	Inf	Inf	Geom	1800	3.25	0.00	Y	
6/2	Inf	Inf	Geom	1800	3.25	0.00	N	
7/1	Inf	Inf	Geom	1800	5.00	0.00	Y	
8/1	Inf	Inf	Geom	1800	3.25	0.00	Y	
8/2	Inf	Inf	Geom	1800	3.25	0.00	N	

Lane Saturation Flows

Flow Group 4: 'Saturday Total 2008'

Arm/ Lane	Lane Width (m)	Gradient	Nearside Lane	Allowed Turns	Turning Radius (m)	Turning Prop.	Sat flow (PCU/Hr)
1/1 (Altrincham Rd East Lane 1)	3.50	0.00	Y	Arm 7 Left	Inf	100.0 %	1965
1/2 (Altrincham Rd East Lane 2)	3.55	0.00	Y	Arm 8 Ahead	Inf	100.0 %	1970
1/3 (Altrincham Rd East Lane 3)	3.55	0.00	N	Arm 8 Ahead	Inf	100.0 %	2110
1/4 (Altrincham Rd East Lane 4)	3.50	0.00	Y	Arm 5 Right	15.00	100.0 %	1786
2/1 (Tesco Access Lane 1)	4.00	0.00	Y	Arm 8 Left	12.00	100.0 %	1791
2/2 (Tesco Access Lane 2)	5.00	0.00	Y	Arm 5 Ahead	Inf	17.2 %	1953
				Arm 6 Right	15.00	82.8 %	
3/1 (Altrincham Rd West Lane 1)	3.25	0.00	Y	Arm 5 Left	10.00	100.0 %	1687
3/2 (Altrincham Rd West Lane 2)	4.00	0.00	Y	Arm 6 Ahead	Inf	100.0 %	2015
3/3 (Altrincham Rd West Lane 3)	4.00	0.00	Y	Arm 6 Ahead	Inf	100.0 %	2015
3/4 (Altrincham Rd West Lane 4)	3.50	0.00	Y	Arm 7 Right	15.00	100.0 %	1786
4/1 (Brookway Retail Park Lane 1)	5.00	0.00	Y	Arm 6 Left	18.00	100.0 %	1952
4/2 (Brookway Retail Park Lane 2)	4.00	0.00	Y	Arm 7 Ahead	Inf	36.1 %	1886
				Arm 8 Right	14.00	63.9 %	
5/1	5.00	0.00	Y				2115
6/1	3.25	0.00	Y				1940
6/2	3.25	0.00	N				2080
7/1	5.00	0.00	Y				2115
8/1	3.25	0.00	Y				1940
8/2	3.25	0.00	N				2080

Traffic Flow Groups Data

Flow Group	Start Time	End Time	Duration	Formula
4: 'Saturday Total 2008'	14:00	15:00	01:00	

Traffic Flow Matrix

Flow Group 4: 'Saturday Total 2008'

Desired Flow :

		Destination				
		A	B	C	D	Tot.
Origin	A	0	150	791	301	1242
	B	188	0	330	39	557
	C	730	182	0	280	1192
	D	215	82	145	0	442
	Tot.	1133	414	1266	620	3433

Signal Plans Data

Stage	1	2	3
Duration	32	24	18
Change Point	0	37	67

Link Results
Flow Group 4: 'Saturday Total 2008'

Link Num	Link Desc	Link Type	Stage Stream	Position In Filtered Route	Full Phase	Arrow Phase	Num Greens	Total Green (s)	Arrow Green (s)	Demand Flow (pcu)	Max Sat Flow (pcu/Hr)	Ave Sat Flow (pcu/Hr)	Capacity (pcu)	Deg Sat (%)
1/1	Altrincham Rd East Right	U	N/A	N/A	E		1	18	-	301	1786	1786	377	79.8
1/2	Altrincham Rd East Ahead	U	N/A	N/A	A		1	24	-	791	4080	4080	1133	69.8
1/3	Altrincham Rd East Left	U	N/A	N/A	A		1	24	-	150	1965	1965	546	27.5
2/1	Tesco Access Ahead Right	O	N/A	N/A	B		1	32	-	227	1953	757	278	81.8
2/2	Tesco Access Left	O	N/A	N/A	B	G	1	60	28	330	1791	1271	862	38.3
3/1	Altrincham Rd West Left Ahead	U	N/A	N/A	C		1	25	-	1010	5717	4168	1204	83.9
3/2	Altrincham Rd West Right	U	N/A	N/A	F		1	18	-	182	1786	1786	377	48.3
4/1	Brookway Retail Park Ahead Right	O	N/A	N/A	D		1	32	-	227	1886	1051	385	58.9
4/2	Brookway Retail Park Left	U	N/A	N/A	D		1	32	-	215	1952	1952	716	30.0

LINSIG V1 style report

Link Num	Entering (pcu)	Leaving (pcu)	Turners In Gaps (pcu)	Turners When Unopposed (pcu)	Turners In Intergreen (pcu)	Uniform Delay (pcuHr)	Rand + Oversat Delay (pcuHr)	Storage Area Uniform Delay (pcuHr)	Total Delay (pcuHr)	Av. Delay Per Veh (s/pcu)	Max. Back of Uniform Queue (pcu)	Rand + Oversat Queue (pcu)	Mean Max Queue (pcu)
1/1	301	301	-	-	-	2.8	1.9	-	4.7	56.2	7.1	1.9	9.0
1/2	791	791	-	-	-	6.4	1.1	-	7.5	34.3	17.6	1.1	18.7
1/3	150	150	-	-	-	1.1	0.2	-	1.2	30.0	2.9	0.2	3.1
2/1	227	227	186	0	2	1.9	2.1	0.2	4.2	65.9	5.3	2.1	7.4
2/2	330	330	99	231	0	0.5	0.3	-	0.8	9.1	3.2	0.3	3.5
3/1	1010	1010	-	-	-	8.3	2.5	-	10.8	38.6	23.6	2.5	26.1
3/2	182	182	-	-	-	1.6	0.5	-	2.0	40.4	4.0	0.5	4.5
4/1	227	227	143	0	2	1.3	0.7	0.0	2.1	32.9	4.2	0.7	4.9
4/2	215	215	-	-	-	1.2	0.2	-	1.4	23.9	3.8	0.2	4.0

PRC for Signalled Links (%): 7.3 Total Delay for Signalled Links (pcuHr): 34.86
PRC Over All Links (%): 7.3 Total Delay Over All Links(pcuHr): 35.62 Cycle Time (s): 90

Weekday Total Flows 2008

User and Project Details

Project:	**Brookway Retail Park**
Title:	**Site Access**
Location:	Baguley
File name:	Linsig site access.LSG
Author:	
Company:	
Address:	
Controller:	Generic
SCN:	
Notes:	

Phase Input Data

Phase Name	Phase type	Assoc Phase	Street Min	Cont Min
A	Traffic		45	45
B	Traffic		7	7
C	Traffic		45	45
D	Traffic		7	7
E	Traffic		7	7
F	Traffic		7	7
G	Filter	B	7	2

Intergreens

		Starting Phase						
		A	B	C	D	E	F	G
Terminating Phase	A		5	-	5	-	5	-
	B	5		5	-	5	5	-
	C	-	5		5	5	-	-
	D	6	-	5		5	6	-
	E	-	5	5	5		-	-
	F	5	5	-	5	-		-
	G	-	-	-	-	-	-	

Phase Delays

There are no phase delays defined in this stage stream

Prohibited Stage Changes

From Stage	To Stage 1	To Stage 2	To Stage 3
1		6	6
2	5		5
3	5	X	

Stage Data

Stage No.	Phases in Stage
1	B D
2	A C
3	E F G

Link Input Data

Arm/ Link	Link Name	Link Type	Num Lanes	Phases	Start Disp.	End Disp.
1/1	Altrincham Rd East Right	U	1	E	2	3
1/2	Altrincham Rd East Ahead	U	2	A	2	3
1/3	Altrincham Rd East Left	U	1	A	2	3
2/1	Tesco Access Ahead Right	O	1	B	2	3
2/2	Tesco Access Left	O	1	B G	2	3
3/1	Altrincham Rd West Left Ahead	U	3	C	2	3
3/2	Altrincham Rd West Right	U	1	F	2	3
4/1	Brookway Retail Park Ahead Right	O	1	D	2	3
4/2	Brookway Retail Park Left	U	1	D	2	3
5/1		U	1		2	3
6/1		U	2		2	3
7/1		U	1		2	3
8/1		U	2		2	3

Opposed Link Data

Arm/ Link	Link Name	Max Flow When Giving Way (PCU/Hr)	Opp. Link 1	Opp. Link 1 Coeff.	Opp. Link 2	Opp. Link 2 Coeff.	Right Turn Storage (PCU)	Non-Blocking Storage (PCU)	RTF	Right Turn Move up time (s)	Max Turns in Intergreen (PCU)
2/1	Tesco Access Ahead Right	1400	4/1	1.09	4/2	1.09	1.00	0.00	0.50	1	2.00
2/2	Tesco Access Left	715	4/1	0.22			2.00	2.00	0.50	2	2.00
4/1	Brookway Retail Park Ahead Right	1400	2/1	1.09			1.00	0.00	0.50	1	2.00

Lane Input Data

Arm/ Lane	Actual Length (PCU)	Effective Length (PCU)	Sat Flow Type	User Saturation Flow (PCU/Hr)	Lane Width (m)	Gradient	Nearside Lane	Allowed Turns	Turning Radius (m)
1/1 (Altrincham Rd East Lane 1)	Inf	Inf	Geom	1800	3.50	0.00	Y	Arm 7 Left	Inf
1/2 (Altrincham Rd East Lane 2)	Inf	Inf	Geom	1800	3.55	0.00	Y	Arm 8 Ahead	Inf
1/3 (Altrincham Rd East Lane 3)	Inf	Inf	Geom	1800	3.55	0.00	N	Arm 8 Ahead	Inf
1/4 (Altrincham Rd East Lane 4)	Inf	Inf	Geom	1800	3.50	0.00	Y	Arm 5 Right	15.00
2/1 (Tesco Access Lane 1)	Inf	Inf	Geom	1800	4.00	0.00	Y	Arm 8 Left	12.00
2/2 (Tesco Access Lane 2)	Inf	Inf	Geom	1800	5.00	0.00	Y	Arm 5 Ahead	Inf
								Arm 6 Right	15.00
3/1 (Altrincham Rd West Lane 1)	5	1	Geom	1800	3.25	0.00	Y	Arm 5 Left	10.00
3/2 (Altrincham Rd West Lane 2)	Inf	Inf	Geom	1800	4.00	0.00	Y	Arm 6 Ahead	Inf
3/3 (Altrincham Rd West Lane 3)	Inf	Inf	Geom	1800	4.00	0.00	Y	Arm 6 Ahead	Inf
3/4 (Altrincham Rd West Lane 4)	Inf	Inf	Geom	1800	3.50	0.00	Y	Arm 7 Right	15.00
4/1 (Brookway Retail Park Lane 1)	Inf	Inf	Geom	1800	5.00	0.00	Y	Arm 6 Left	18.00
4/2 (Brookway Retail Park Lane 2)	Inf	Inf	Geom	1800	4.00	0.00	Y	Arm 7 Ahead	Inf
								Arm 8 Right	14.00
5/1	Inf	Inf	Geom	1800	5.00	0.00	Y		
6/1	Inf	Inf	Geom	1800	3.25	0.00	Y		
6/2	Inf	Inf	Geom	1800	3.25	0.00	N		
7/1	Inf	Inf	Geom	1800	5.00	0.00	Y		
8/1	Inf	Inf	Geom	1800	3.25	0.00	Y		
8/2	Inf	Inf	Geom	1800	3.25	0.00	N		

Lane Saturation Flows

Flow Group 3: 'Weekday Total 2008'

Arm/ Lane	Lane Width (m)	Gradient	Nearside Lane	Allowed Turns	Turning Radius (m)	Turning Prop.	Sat flow (PCU/Hr)
1/1 (Altrincham Rd East Lane 1)	3.50	0.00	Y	Arm 7 Left	Inf	100.0 %	1965
1/2 (Altrincham Rd East Lane 2)	3.55	0.00	Y	Arm 8 Ahead	Inf	100.0 %	1970
1/3 (Altrincham Rd East Lane 3)	3.55	0.00	N	Arm 8 Ahead	Inf	100.0 %	2110
1/4 (Altrincham Rd East Lane 4)	3.50	0.00	Y	Arm 5 Right	15.00	100.0 %	1786
2/1 (Tesco Access Lane 1)	4.00	0.00	Y	Arm 8 Left	12.00	100.0 %	1791
2/2 (Tesco Access Lane 2)	5.00	0.00	Y	Arm 5 Ahead	Inf	10.5 %	1941
				Arm 6 Right	15.00	89.5 %	
3/1 (Altrincham Rd West Lane 1)	3.25	0.00	Y	Arm 5 Left	10.00	100.0 %	1687
3/2 (Altrincham Rd West Lane 2)	4.00	0.00	Y	Arm 6 Ahead	Inf	100.0 %	2015
3/3 (Altrincham Rd West Lane 3)	4.00	0.00	Y	Arm 6 Ahead	Inf	100.0 %	2015
3/4 (Altrincham Rd West Lane 4)	3.50	0.00	Y	Arm 7 Right	15.00	100.0 %	1786
4/1 (Brookway Retail Park Lane 1)	5.00	0.00	Y	Arm 6 Left	18.00	100.0 %	1952
4/2 (Brookway Retail Park Lane 2)	4.00	0.00	Y	Arm 7 Ahead	Inf	31.7 %	1878
				Arm 8 Right	14.00	68.3 %	
5/1	5.00	0.00	Y				2115
6/1	3.25	0.00	Y				1940
6/2	3.25	0.00	N				2080
7/1	5.00	0.00	Y				2115
8/1	3.25	0.00	Y				1940
8/2	3.25	0.00	N				2080

Traffic Flow Groups Data

Flow Group	Start Time	End Time	Duration	Formula
3: 'Weekday Total 2008'	17:00	18:00	01:00	

Traffic Flow Matrix

Flow Group 3: 'Weekday Total 2008'

Desired Flow :

		Destination				
		A	B	C	D	Tot.
Origin	A	0	60	825	204	1089
	B	137	0	276	16	429
	C	1111	75	0	221	1407
	D	83	33	71	0	187
	Tot.	1331	168	1172	441	3112

Signal Plans Data

Stage	1	2	3
Duration	18	45	11
Change Point	0	23	74

Link Results

Flow Group 3: 'Weekday Total 2008'

Link Num	Link Desc	Link Type	Stage Stream	Position In Filtered Route	Full Phase	Arrow Phase	Num Greens	Total Green (s)	Arrow Green (s)	Demand Flow (pcu)	Max Sat Flow (pcu/Hr)	Ave Sat Flow (pcu/Hr)	Capacity (pcu)	Deg Sat (%)
1/1	Altrincham Rd East Right	U	N/A	N/A	E		1	11	-	204	1786	1786	238	85.7
1/2	Altrincham Rd East Ahead	U	N/A	N/A	A		1	45	-	825	4080	4080	2085	39.6
1/3	Altrincham Rd East Left	U	N/A	N/A	A		1	45	-	60	1965	1965	1004	6.0
2/1	Tesco Access Ahead Right	O	N/A	N/A	B		1	18	-	153	1941	879	186	82.4
2/2	Tesco Access Left	O	N/A	N/A	B	G	1	39	21	276	1791	1409	626	44.1
3/1	Altrincham Rd West Left Ahead	U	N/A	N/A	C		1	46	-	1332	5717	4107	2145	62.1
3/2	Altrincham Rd West Right	U	N/A	N/A	F		1	11	-	75	1786	1786	238	31.5
4/1	Brookway Retail Park Ahead Right	O	N/A	N/A	D		1	18	-	104	1878	994	210	49.6
4/2	Brookway Retail Park Left	U	N/A	N/A	D		1	18	-	83	1952	1952	412	20.1

Link Num	Entering (pcu)	Leaving (pcu)	Turners In Gaps (pcu)	Turners When Unopposed (pcu)	Turners In Intergreen (pcu)	Uniform Delay (pcuHr)	Rand + Oversat Delay (pcuHr)	Storage Area Uniform Delay (pcuHr)	Total Delay (pcuHr)	Av. Delay Per Veh (s/pcu)	Max. Back of Uniform Queue (pcu)	Rand + Oversat Queue (pcu)	Mean Max Queue (pcu)
1/1	204	204	-	-	-	2.2	2.6	-	4.8	83.9	5.0	2.6	7.6
1/2	825	825	-	-	-	3.1	0.3	-	3.4	14.9	12.6	0.3	12.9
1/3	60	60	-	-	-	0.2	0.0	-	0.2	13.0	0.8	0.0	0.8
2/1	153	153	130	0	7	1.5	2.1	0.1	3.7	87.8	3.7	2.1	5.8
2/2	276	276	40	236	0	1.3	0.4	-	1.7	21.6	4.5	0.4	4.9
3/1	1332	1332	-	-	-	5.5	0.8	-	6.3	17.0	22.9	0.8	23.8
3/2	75	75	-	-	-	0.7	0.2	-	1.0	46.3	1.7	0.2	1.9
4/1	104	104	70	0	1	0.9	0.5	0.0	1.4	47.5	2.2	0.5	2.7
4/2	83	83	-	-	-	0.7	0.1	-	0.8	34.7	1.7	0.1	1.8

PRC for Signalled Links (%): 5.1 Total Delay for Signalled Links (pcuHr): 23.19
PRC Over All Links (%): 5.1 Total Delay Over All Links(pcuHr): 23.82 Cycle Time (s): 90