Fume Extraction details

For Planning Submission

28(C) AND 28(D) BURY NEW ROAD
MANCHESTER
M8 8EL

The kitchen cooking canopy will be connected to an external extract duct to be located at the rear of the property. The extract duct and fume extraction shall be in accordance with the local environmental health officer requirements.

Details of fume extraction will include the Fläkt Woods Powerbox GF 400E4 - Greasefighter, a kitchen canopy fan featuring an externally located motor, enabling high performance canopy extraction, at high temperatures.

The powerbox Greasefighter has been purpose-designed for commercial kitchen exhaust systems, to remove heat produced by cooking appliances, as well as kitchen odours, smoke and products of combustion, in order to maintain a comfortable working environment for kitchen staff.

Featuring motor-out-of-airstream, the new Greasefighter can operate within much higher ambient temperatures, of up to 80°C.

Filtration of contaminated air and odours means that fans suitable for use with carbon filters are required. The Powerbox - Greasefighter can cope with the demand for high pressure systems and have the added benefit of possible multiple outlet positions.

Its compact design combined with its housing construction of double skinned pre-fabricated mild sheet steel makes the product suitable for either internal or external mounting. It is proposed the unit will be externally mounted at the location shown in the floorplan, 2.5m above ground level.

Telephone: 01206 222 555
Fax: 01206 222 905
Email: fans.uk@flaktwoods.com
Express Website: www.flaktwoods.com/express
Fan Selector: www.flaktwoods.com/fanselector

PowerBox & PowerBox GF

Boxed Fans

- Volume flow up to 2.8m^3/s
- Static pressures up to 700 Pa
- Unit design provides a smooth internal surface
- Backward curved centrifugal impeller
- Maintenance-free, long-life ball bearings
- Flexible outlet positioning
- Double skinned housing manufactured from pre-galvanised mild steel sheet with 40mm non-flammable mineral wool infill for thermal and acoustic insulation
- PowerBox GF motor located out of airstream

Sizes

400, 450, 500, 560mm diameter.

Fan Performance

The fan has been tested using a duct test chamber in accordance with DIN 24163. The values refer to an air density of 1.2 Kg/m^3 at 20°C.

Electrical Supply

230V / 50Hz / 1ϕ
400V / 50Hz / 3ϕ
Maximum ambient temperature is between 40°C and 80°C (depending on model)

Casings

Panel insulation is provided by non-flammable (A1) mineral fibre slab in accordance with EN13501.

Thermal insulation K = 0.89W/m2k in accordance with DIN 52210.

Sound insulation Rw = approximately 25dB in accordance with DIN 52210.

Accessories

Speed controllers, Circular inlet and outlet spigots. For a full range please see pages 100-101



Application Guide



Performance Data

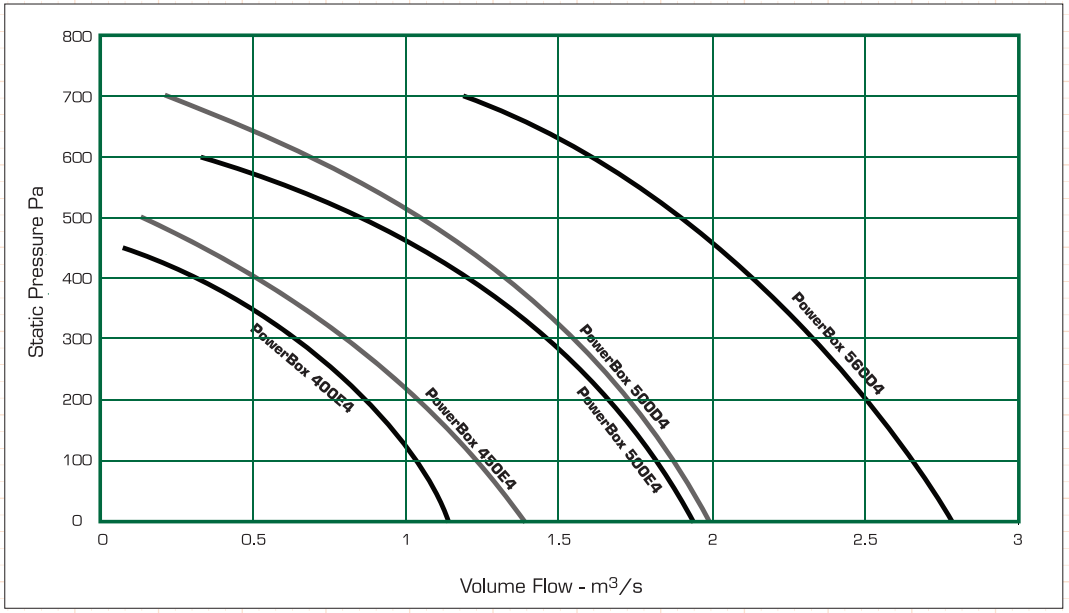

Electrical Data

Product Code	Speed rev/min	Max Operating Temp	230V/50Hz/1ϕ				Speed Controller	Wiring Diagram Ref	Sound Levels LpA @ 3m		m³/s at Pa (Static)											
			Product Number	Motor Rating (kW)	Full Load Current (at 230V) (A)	Starting Current (at 230V) (A)	Transformer		Inlet dBA	Outlet dBA	0	50	100	150	200	250	300	350	400	450	500	600
400E4	1340	45°C	AX404102	0.565	2.9	6.1	**MT1.5**	CD2359	53	56	1.14	1.1	1.04	0.97	0.88	0.77	0.64	0.5	0.33	0.08		
450E4	1210	40°C	AX454102	0.81	3.8	7.8	**MT1.5**	CD2359	51	53	1.39	1.32	1.23	1.14	1.04	0.93	0.81	0.66	0.51	0.32	0.14	
500E4	1350	55°C	AX504102	1.285	7.0	16	**MT1.8**	CD2359	56	56	1.94	1.88	1.83	1.75	1.67	1.56	1.47	1.35	1.21	1.06	0.86	0.33

Product Code	Speed rev/min	Max Operating Temp	380-420/50Hz/3ϕ				Speed Controller	Wiring Diagram Ref	Sound Levels LpA @ 3m		m³/s at Pa (Static)												
			Product Number	Motor Rating (kW)	Full Load Current (at 400V) (A)	Starting Current (at 400V) (A)	Electronic		Inlet dBA	Outlet dBA	0	50	100	150	200	250	300	350	400	450	500	600	700
500D4	1400	55°C	AX504302	1.62	3.9	15	**MT3.7**	CD2359	56	61	1.99	1.95	1.88	1.8	1.72	1.64	1.54	1.44	1.33	1.2	1.05	0.68	0.22
560D4	1360	50°C	AX564302	2.2	4.8	20	**MT3.7**	CD2359	59	64	2.78	2.72	2.66	2.59	2.515	2.43	2.34	2.24	2.13	2.02	1.9	1.61	1.19

Bold text denotes Super Express Product, next day delivery available if ordered by 4pm.

The fan noise levels shown are for the specified operating point. When an electronic controller is incorporated, a magnetic not e (enhanced motor noise) can occur - par ticularly if the fan is operating at speeds well below maximum. For noise sensitive applications FWL recommend using an auto transformer speed controller .

Wiring diagrams can be found on pages 92-93.

Telephone: 01206 222 555
Fax: 01206 222 905
Email: fans.uk@flaktwoods.com
Express Website: www.flaktwoods.com/express
Fan Selector: www.flaktwoods.com/fanselector

PowerBox GreaseFighter

Boxed Fans

Super XPRESS Range

Performance Data

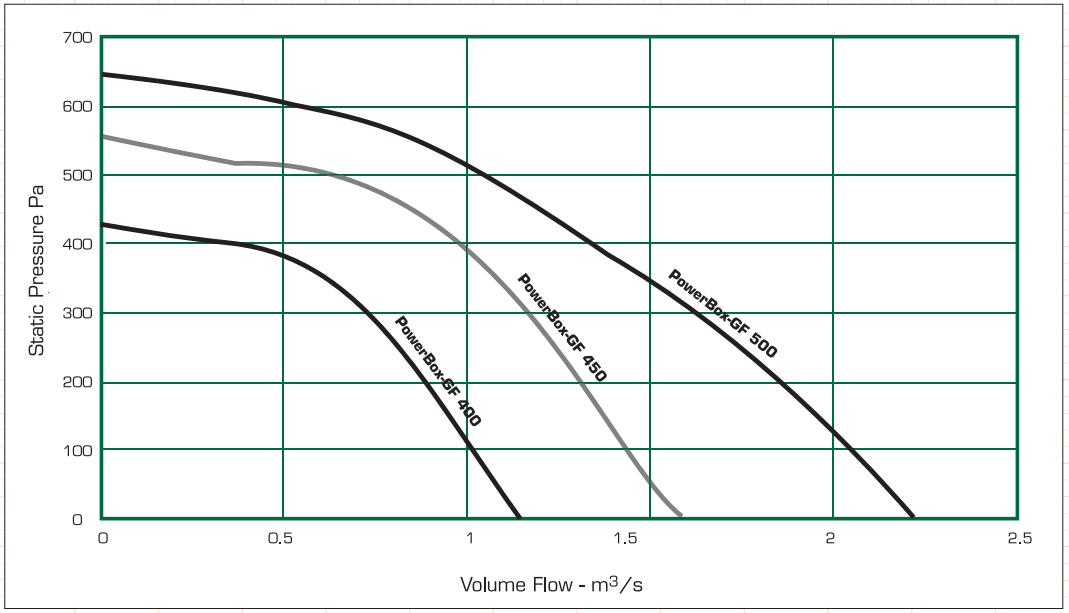

Electrical Data

Product Code	Speed (rev/min)	Product Number	Max Operating Temp	220-240V/50Hz/1ϕ			Speed Controller		Sound Levels LpA @ 3m *see note 1		m3/s @ Pa (Static)							Weight (Kg)	Optional Circular Spigot Connections available		
				Motor Rating (kW)	Full Load Current (at 230V) (A)	Max Starting Current (at 230V) (A)	Transformer	Part Number	Inlet dBA	Outlet dBA	0	100	200	300	400	500	600		400mm diameter	450mm diameter	500mm diameter
Powerbox-GF400	**1380**	**AX404104**	**70°C**	**0.57**	**3.2**	**12.8**	**MT1.5**	DA423099	52	55	1.14	1.02	0.72	0.31				58.5	✓	✓	✓
Powerbox-GF450	**1360**	**AX454104**	**80°C**	**0.87**	**5.0**	**20.0**	**MT1.5**	DA423099	55	58	1.58	1.44	1.31	1.17	0.97	0.61		59.5	✓	✓	✓
Powerbox-GF500	**1350**	**AX504104**	**75°C**	**1.28**	**7.0**	**28.0**	**MT1.8**	DA402009	60	62	2.22	2.04	1.85	1.63	1.32	1.06	0.51	71.2	✓	✓	✓

Bold text denotes Super Express Product, next day delivery available if ordered by 4pm.

The fan noise levels shown are for the specified operating point. When an electronic controller is incorporated, a magnetic not e (enhanced motor noise) can occur - par ticularly if the fan is operating at speeds well below maximum. For noise sensitive applications FWL recommend using an auto transformer speed controller .

Wiring diagrams can be found on pages 92-93.

*Note 1: Sound Levels shown are for comparatives purposes only . Levels are an average value over a sphere at 3 metres, in fre e field conditions.

Dimensions

PowerBox & PowerBox GF

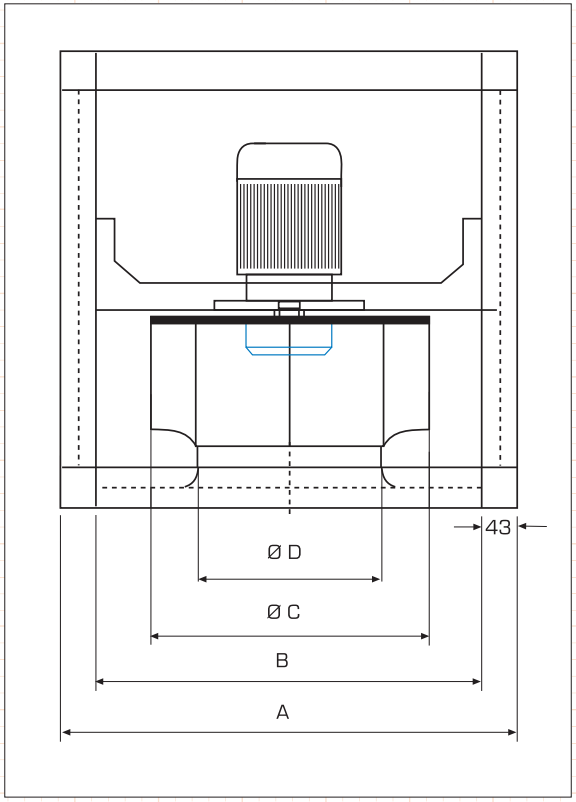

Product Code	A	B	C	D	Weight (Kg)
400 E4	700	614	400	362	55
450 E4	700	614	450	392	58
500 D4 or E4	700	614	500	367	67
560 D4	900	814	560	420	98

Casing can be easily configured on site to enable three different outlet possibilities.

Transformer Speed Controller

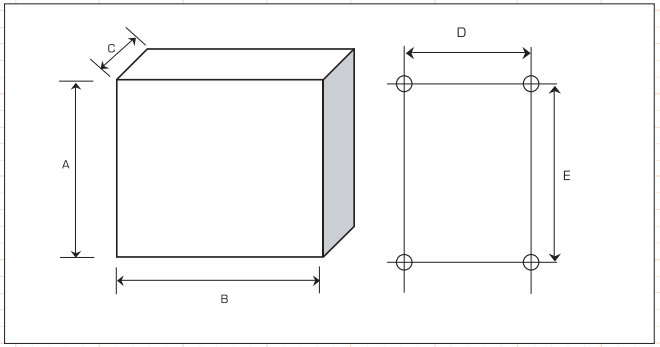

Type	Number Product	A	B	C	D	E	Max. Weight (kg)
MT1.5	423099	255	170	140	155	194	5.5
MT1.8	402011	325	300	185	255	255	8

All dimensions shown in mm.

Telephone: 01206 222 555
Fax: 01206 222 905
Email: fans.uk@flaktwoods.com
Express Website: www.flaktwoods.com/express
Fan Selector: www.flaktwoods.com/fanselector

PowerBox & PowerBox GF

Boxed Fans

Wiring Diagrams

PowerBox

Fan 400-450 1ϕ

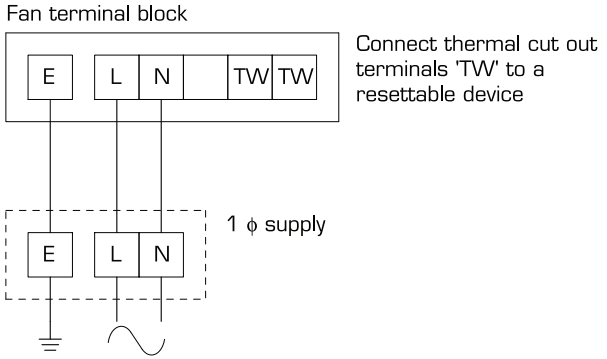

Fan 400-450 1ϕ + Transformer Speed Controller

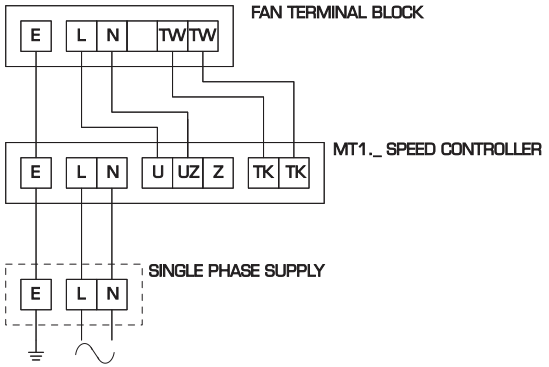

PowerBox

Fan 500 1ϕ

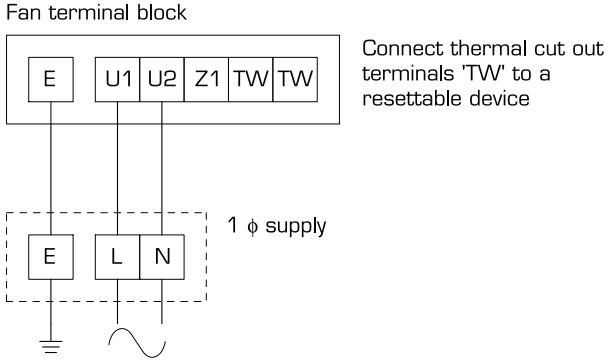

Fan 500 1ϕ + Transformer Speed Controller

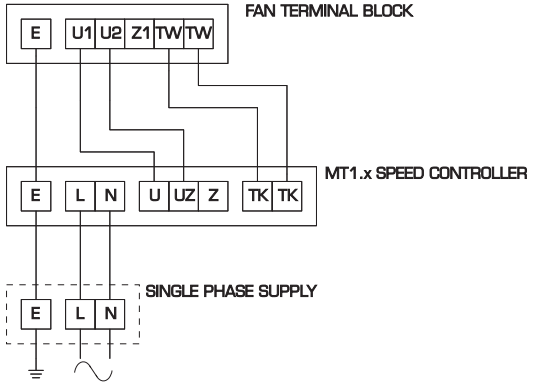

PowerBox & PowerBox GF

Boxed Fans

PowerBox

Fan 560 3ϕ

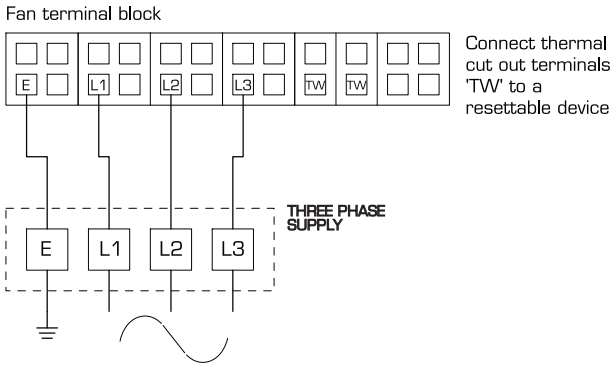

Fan 560 3ϕ + Transformer Speed Controller

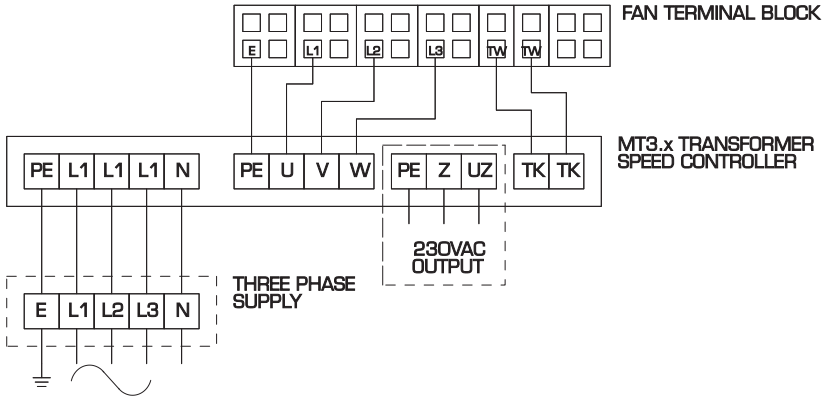

PowerBox - GF

Fan

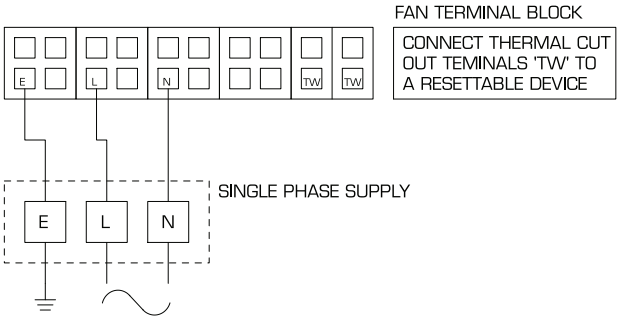

Fan + Transformer Speed Controller

