Proposed South Elevation

Proposed East Elevation

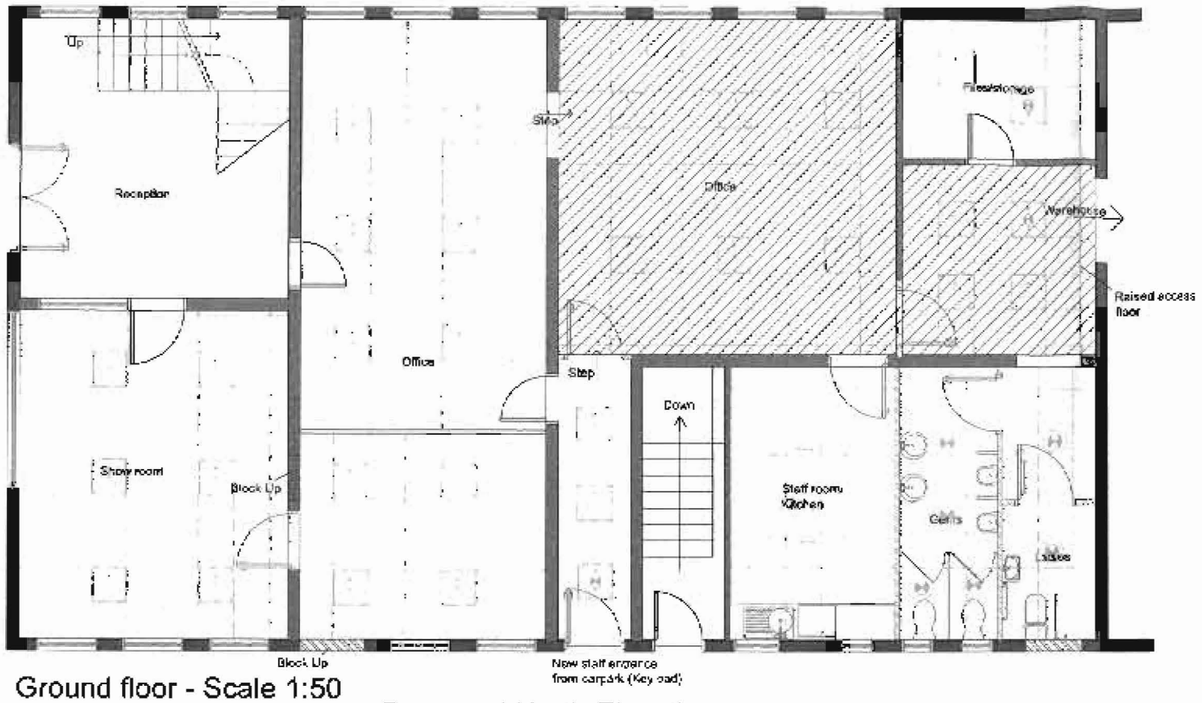

Ground floor - Scale 1:50

Proposed North Elevation

Proposed South Elevation

Proposed East Elevation

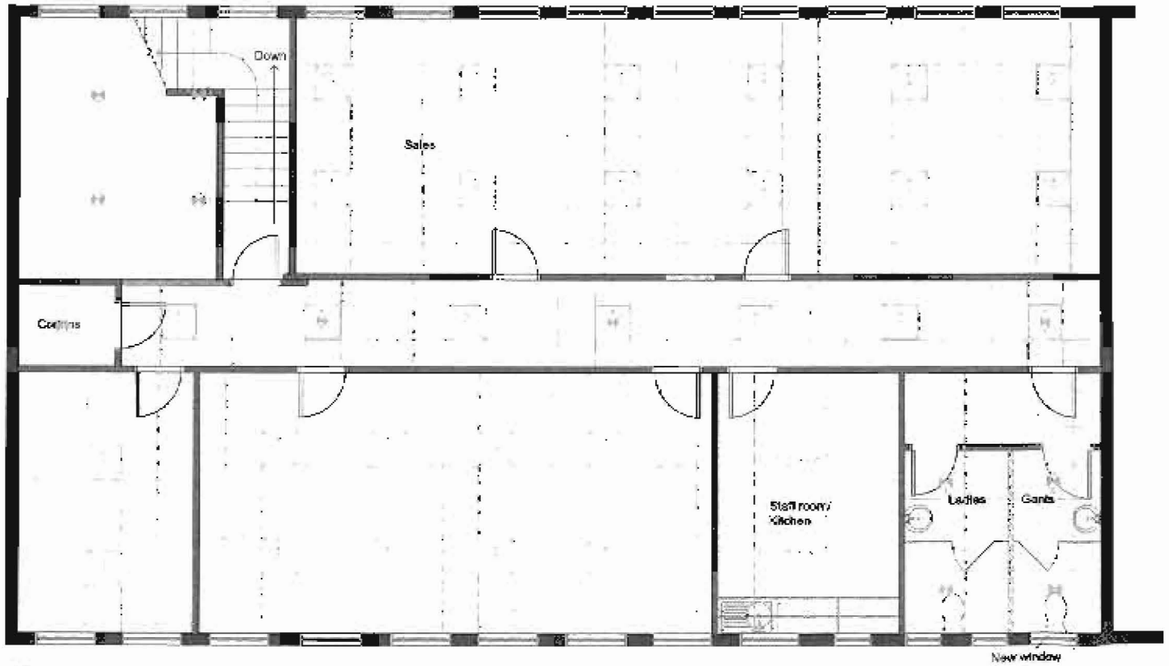

First floor - Scale 1:50

Proposed North Elevation

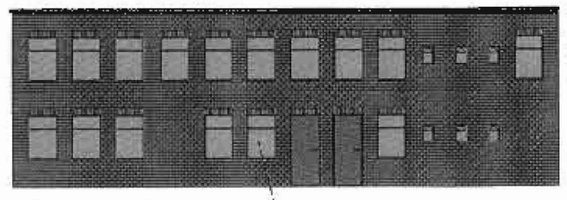

Proposed North Elevation

All windows existing white UPVC

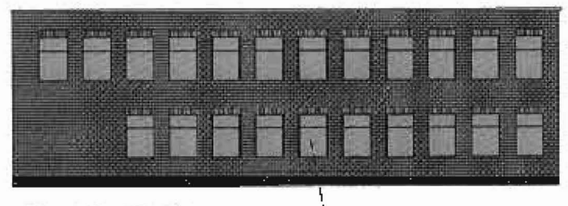

Proposed South Elevation (Helmet Street)

All windows new dark grey power coated aluminium

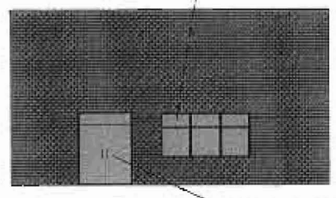

Proposed East Elevation

Internal open lathe shutter

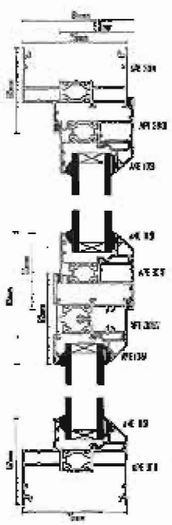

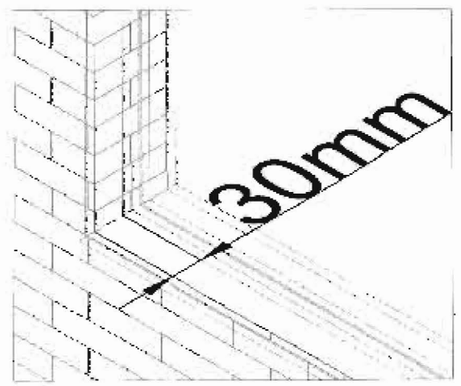

Window recessed 30mm

REV	DESCRIPTION	DATE

herriots DESIGN & BUILD LTD
RIVERSIDE HOUSE,
HADFIELD STREET,
DUKINFIELD,
SK16 4QX
Tel 0161 343 0800
Fax 0161 330 1238

Client:

EVANS TEXTILE

Drawing Title:

Proposed Floor Plans and Elevations
Unit 22
Piccadilly Trading Estate
Helmet St
Manchester

Drawn By:	Date:	Rev:	Scale:	Size:
N.Meddows	04.03.08	A	1:100	A1

Dwg No:

ET-Elevations

Doc for: Discussion

Checked:

Refer any omissions or errors to Herriots Design & Build Ltd
Do not scale from this drawing. Use only given dimensions.
This drawing must not be used for any other purpose other than for which it is supplied.
©copyright ©
HERRIOTS DESIGN & BUILD Ltd

Space Planning · Interior Design · Fit-Out Refurbishment · Office Furniture · Industrial Projects · M & E Installations · Mezz Floors

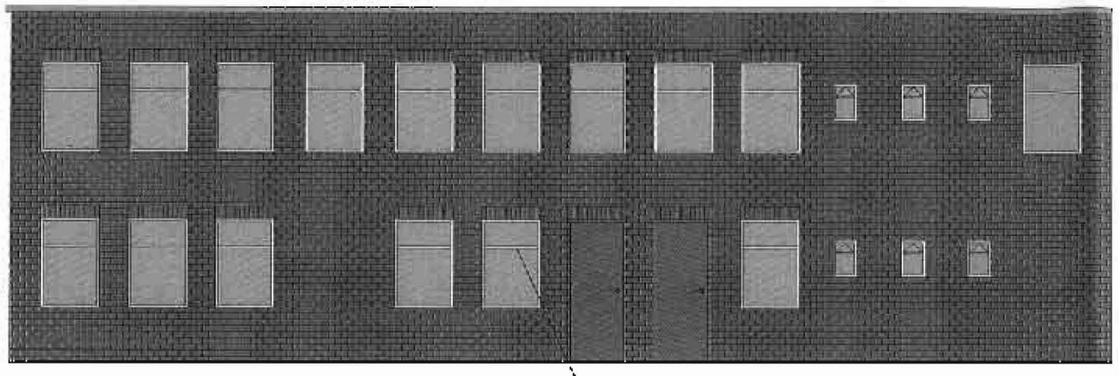

Proposed North Elevation

All windows existing white UPVC

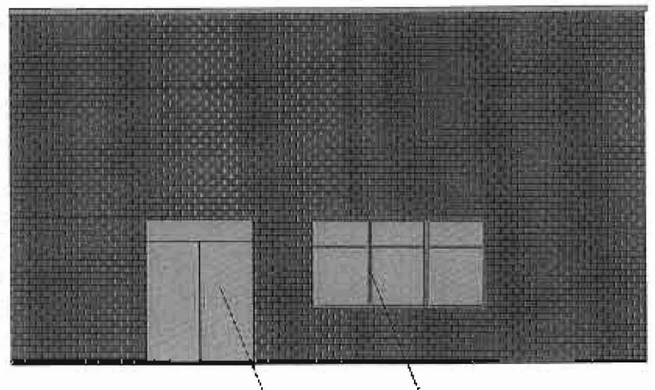

Proposed East Elevation

All windows new dark grey power coated aluminium

Internal open lathe shutter

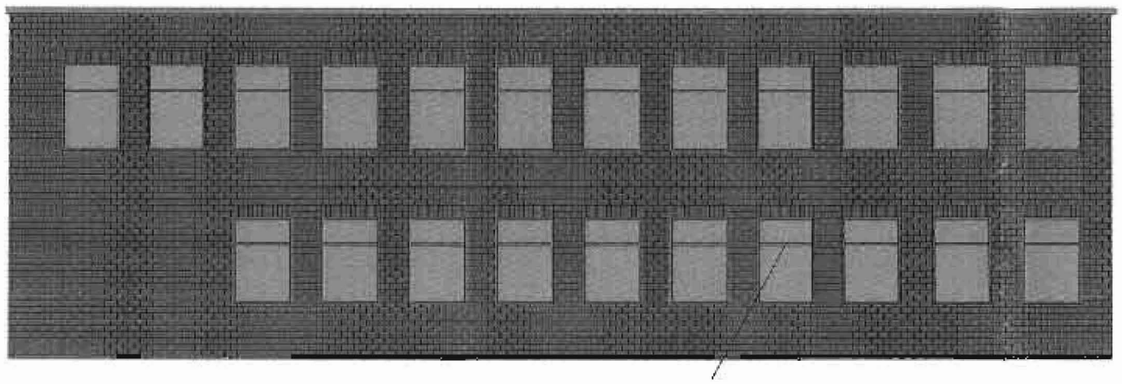

Proposed South Elevation
(Helmet Street)

All windows new dark grey power coated aluminium

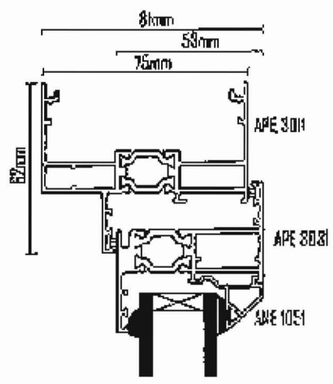

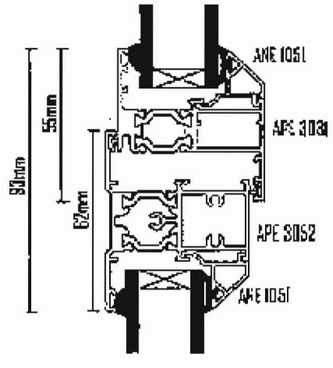

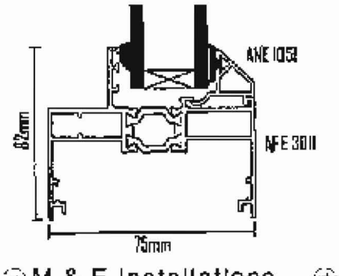

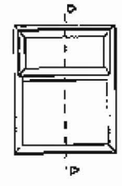

Window recessed 30mm

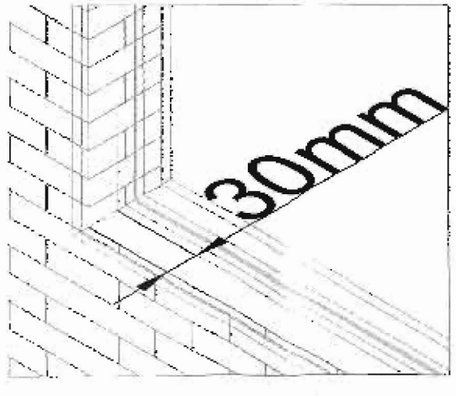

Space Planning · Interior Design · Fit-Out Refurbishment · Office Furniture · Industrial Projects · M & E Installations · Mezz Floors

REV	DESCRIPTION	DATE

herriots
RIVERSIDE HOUSE
HADFIELD STREET,
DUKINFIELD,
SK16 4QX.
Tel:0161 343 0800.
Fax:0161 330 1238.

Client:

EVANS TEXTILE

Drawing Title:

Proposed Elevations
Unit 22
Piccadilly Trading Estate
Helmet St
Manchester

Drawn By:	Date:	Rev:	Scale:	Size:
N.Meddows	04.03.08	A.	1:50	A1

Dwg No:

ET-Elevations 2

Doc for: Discussion

Checked

Refer any omissions or errors to Herriots Design & Build Ltd
Do not scale from this drawing. Use only given dimensions.
This drawing must not be used for any other purpose other than for which it is supplied
Copyright ©
HERRIOTS DESIGN & BUILD Ltd