MANCHESTER MOSLEY STREET NORTH - PROPERTY REFERENCE 00002001

RBS
The Royal Bank of Scotland

EXISTING ELEVATION



PROPOSED ELEVATION



Sign Description and Comments

1. SPECIAL ILLUMINATED INDIVIDUAL LETTERS FITTED TO WIRING BARS TO MATCH COLOUR OF BUILDING.
2. SPECIAL Welcome and security

Name plaque to be removed

NOTE: ALL SIGNS SHOWN ARE APPROXIMATE. DETAILS TO BE CONFIRMED ON SITE.

1

RBS
The Royal Bank of Scotland

BUILT UP logo and letters
RBS Cap height 404mm high
strapline is 82mm high

SECTION DETAIL

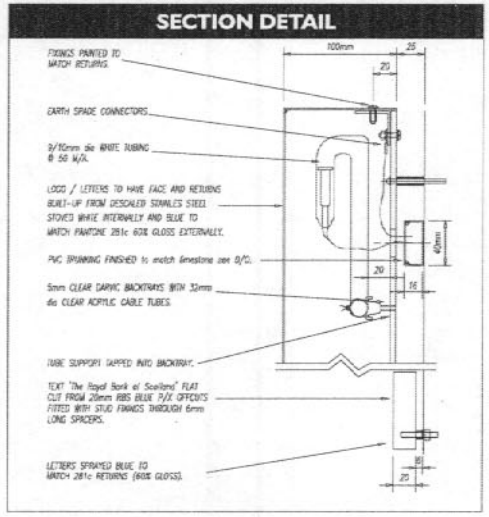

2

250mm x 625mm
Folded aluminium
painted panel with
decorated texts



Welcome / Security Sign

Job Title

RBS
The Royal Bank of Scotland

38 MOSLEY STREET, MANCHESTER. M60 2BE

Site No. **180** Sheet No. **1 of 3**

Date **10/10/05** Drawn By **BS**

Revisions

REV A) LETTERS REVISED TO ILLUMINATED K.K 21/11/05
REV B) PANELS REVISED TO FROSTED ACRYLIC K.K 13/3/06
REV C) PANELS REMOVED FROM HIGH LEVEL SIGNS N.C. 23-03-06
REV D) ENTRANCE SIGNS REVISED C.I 03/04/06
REV E) SCHEME REVISED K.K 22/6/06
REV F) SIGNS REMOVED K.K 28/9/06
REV G) SIGN REMOVED S.P 17/10/06

G

BLAZE NEON LTD
5 Patricia Way, Pysons Road,
Broadstairs, Kent. CT10 2XZ.
T +44 (0) 1843 601075 F +44 (0) 1843 867924
design@blazeneon.com
www.blazeneon.com

OT SCALE FROM THIS DRAWING

THE COPYRIGHT OF THIS DRAWING IS OWNED BY BLAZE NEON LIMITED AND IS NOT TO BE DISCLOSED TO OTHER PERSONS OR TO BE USED FOR MANUFACTURING PURPOSES WITHOUT PERMISSION.

MANCHESTER MOSLEY STREET NORTH - PROPERTY REFERENCE 00002001

RBS
The Royal Bank of Scotland

EXISTING ELEVATION



PROPOSED ELEVATION

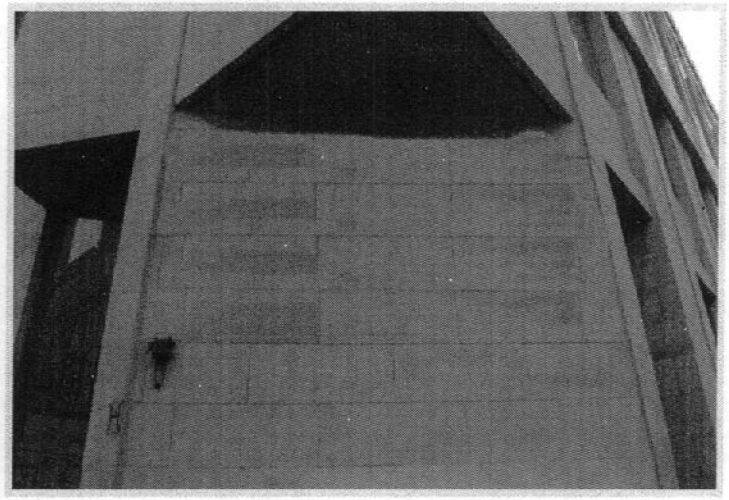

Sign Description and Comments

EXISTING SIGN TO BE REMOVED

NOTE: ALL SIGNS SHOWN ARE APPROXIMATE.
DETAILS TO BE CONFIRMED ON SITE.

Job Title

RBS
The Royal Bank of Scotland

38 MOSLEY STREET, MANCHESTER. M60 2BE

Site No. **180** Sheet No. **2 of 3**

Date **10/10/05** Drawn By **BS**

Revisions

REV A) LETTERS REVISED TO ILLUMINATED K.K 21/11/05
REV B) PANELS REVISED TO FROSTED ACRYLIC K.K 13/3/06
REV C) PANELS REMOVED FROM HIGH LEVEL SIGNS N.C. 23-03-06
REV D) ENTRANCE SIGNS REVISED C.I 03/04/06
REV E) SCHEME REVISED K.K 22/6/06
REV F) SIGNS REMOVED K.K 28/9/06
REV G) SIGN REMOVED S.P 17/10/06

G

BLAZE NEON LTD
5 Patricia Way, Pysons Road,
Broadstairs, Kent. CT10 2XZ.
T +44 (0) 1843 601075 F +44 (0) 1843 867924
design@blazeneon.com
www.blazeneon.com

NOT SCALE FROM THIS DRAWING

THE COPYRIGHT OF THIS DRAWING IS OWNED BY BLAZE NEON LIMITED AND IS NOT TO BE DISCLOSED TO OTHER PERSONS OR TO BE USED FOR MANUFACTURING PURPOSES WITHOUT PERMISSION.