Instillation and Fixing

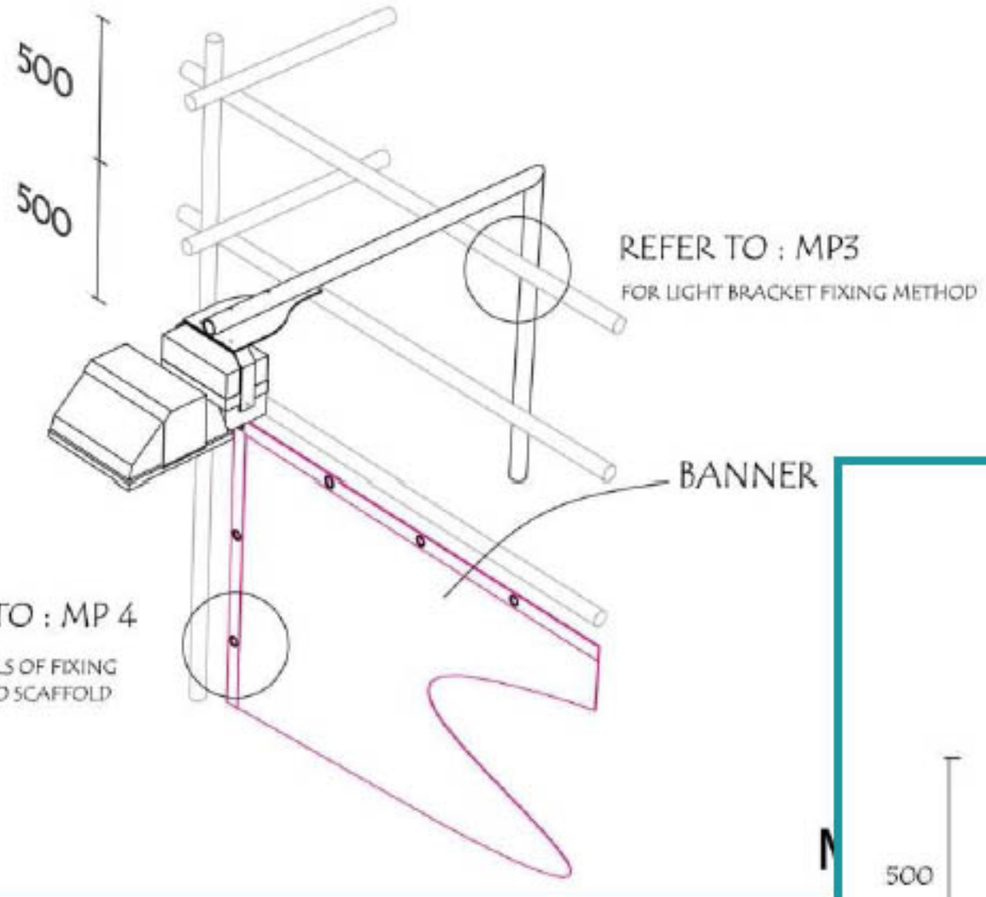

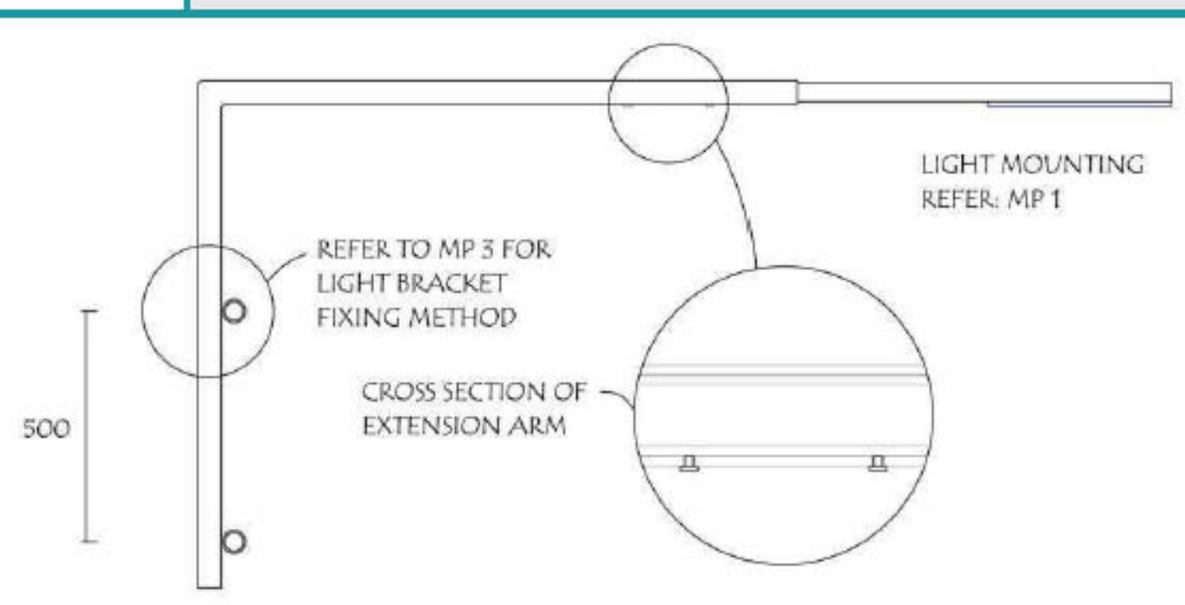

MP2

Instillation and Fixing Continued

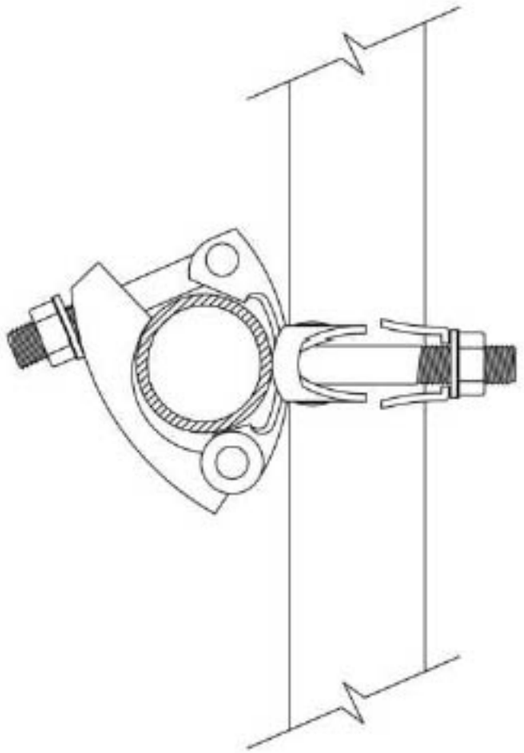

DRAWING SHOWING :
LIGHT BRACKET
FIXING METHOD.

DETAILS OF FIXING BANNER TO SCAFFOLD

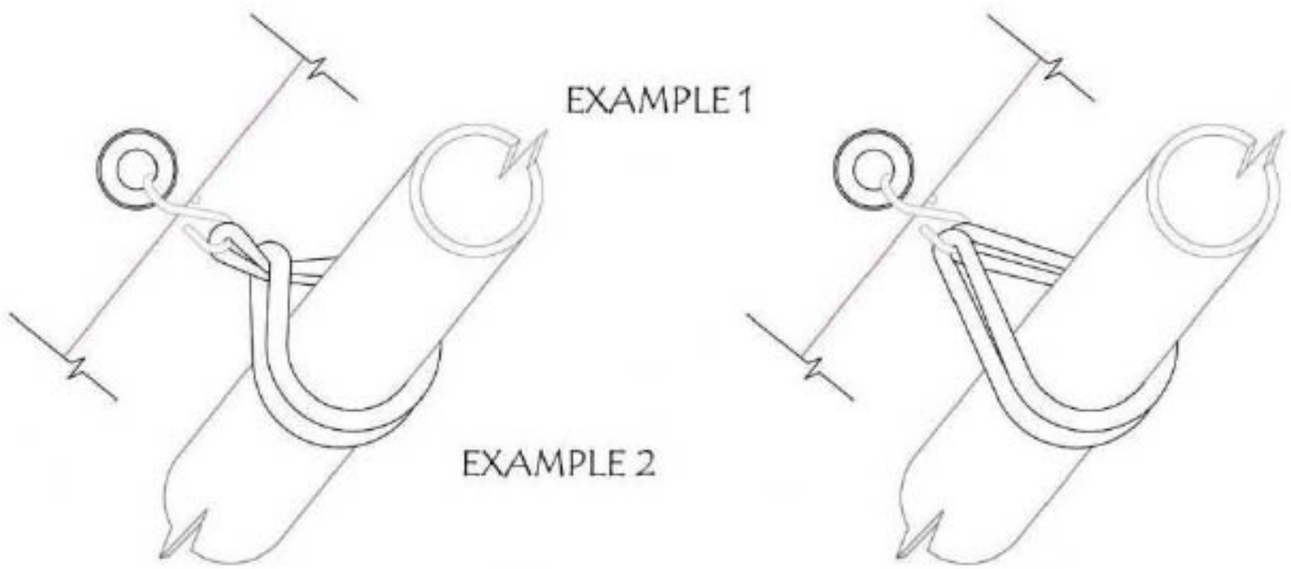

blowUPmedia®

Lighting Information

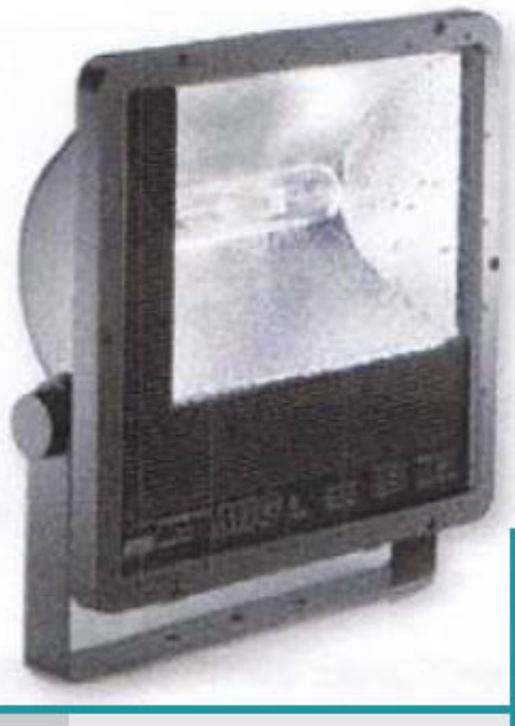

MIG



MIG

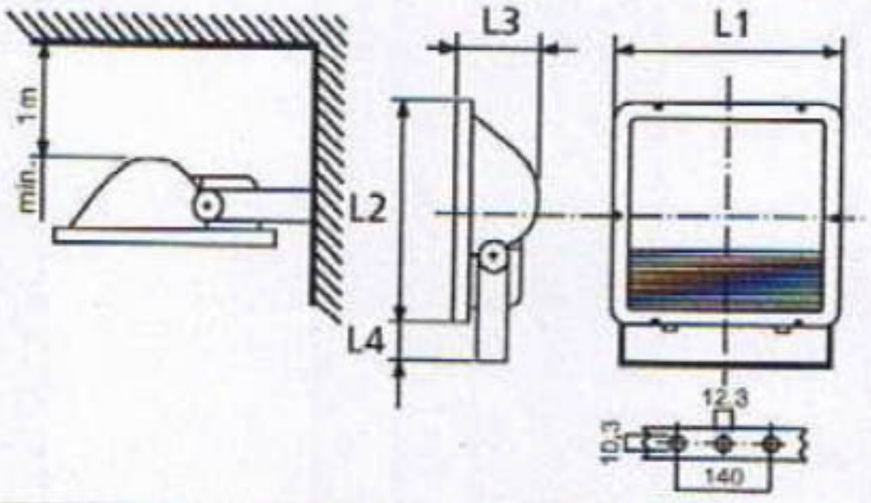

FEATURES

- *Protective system **IP 65***
- *Solid and functional design*
- *Diecast aluminium housing and lid with cooling ribs*
- *Pure aluminium reflector*
- *With integrated ballast, ignitor and capacitor*
- *Wind exposed surface ACT: 0,110 m²; MIG: 0,180 m²*

APPLICATION

- *Monuments/bridges*
- *Industrial areas*
- *Big building sites*
- *Small sports fields*

LIGHT SOURCES

- *For ACT: Metal-halide lamps double-ended RX7s and Fc2 (> see BLV catalogue)*
- *For MIG: Metal-halide lamps single-ended E40 (> see BLV catalogue)*

MIG Metal-Halide Lamps

blowUPmedia

Lighting Information Continued

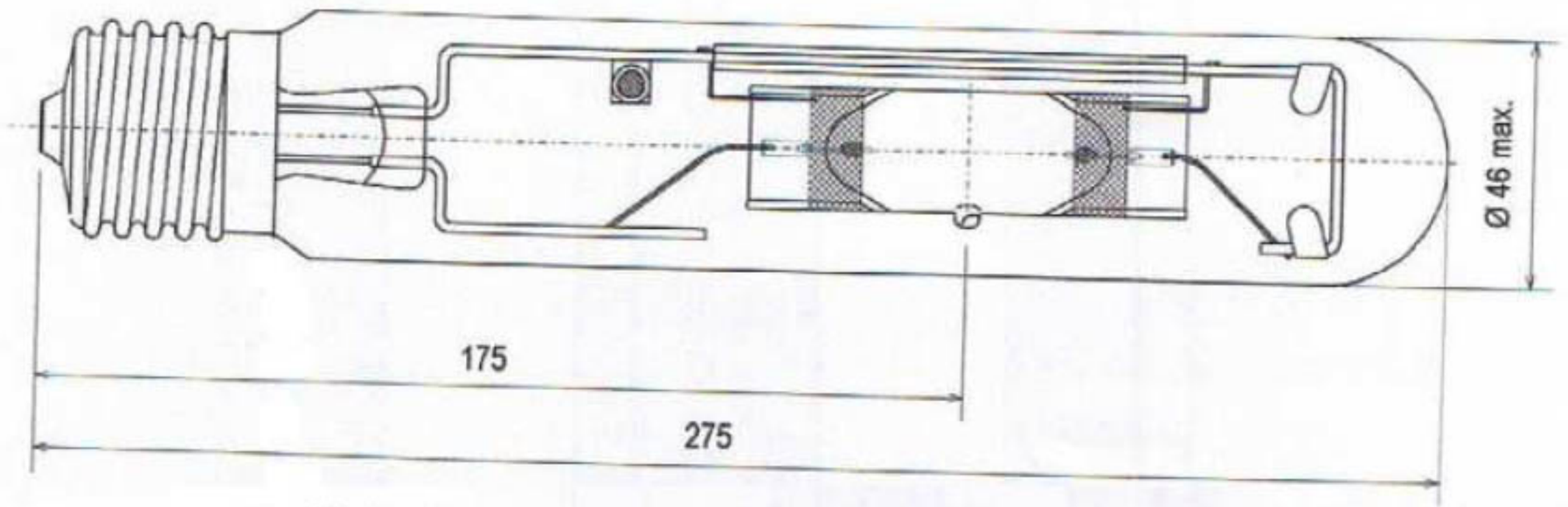

Spezifikation / Specification:

Lampenleistung / Lamp wattage:	400 W
Lampenstrom / Lamp current:	4,0 A
Zündspannung / Ignition voltage:	4 kV
Farbtemperatur / Colour temperature:	4200 K
Farbkoordinaten / Colour coordinates:	x: 0,372 y: 0,370
Lichtstrom / Lumincus flux:	42000 lm
Mittlere Lebensdauer / Average lifetime:	8.000 h
Sockel / Base:	E40
Zulässige Brennlage / Reliable burning position:	u360
Kolbenform / Bulb contour:	röhrenförmig / tubular
Kolbentyp / Bulb type:	klar / clear
Verpackungseinheit (Stck.) / Box quantity (pcs.):	12

▪MIG Metal-Halide Bulb

blowUPmedia®