PROJECTOR TYPE 2

PLANNING
RECD 16 JUN 2008

TYPICAL SECTION DETAILS OF NON ILLUMINATED PROJECTION SIGN

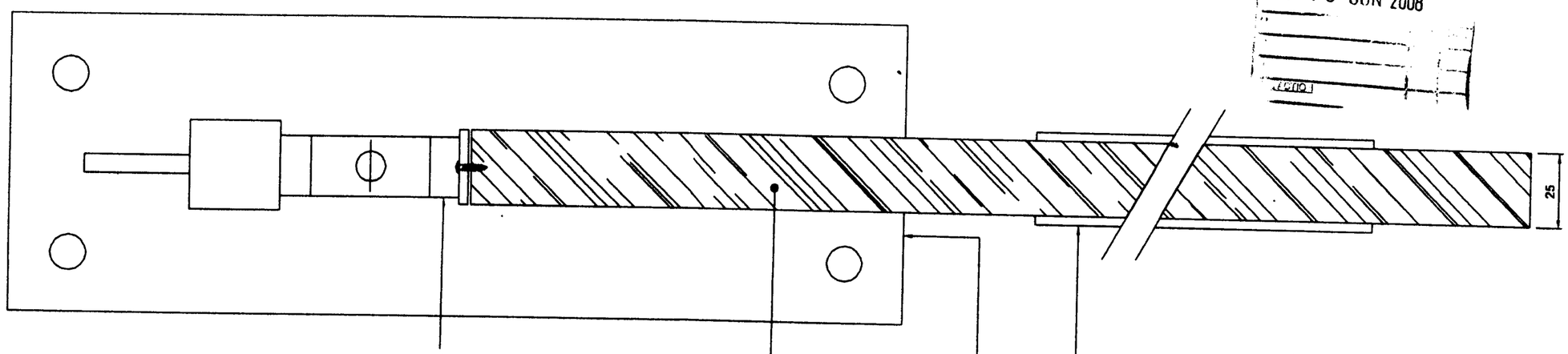

FACE VIEW 1:10 @ A3

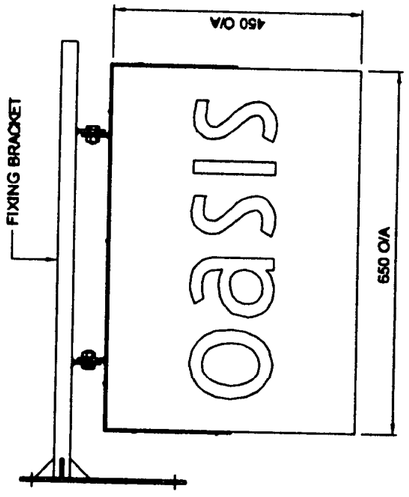

IMAGE TECHNIQUE IMAGE TECHNIQUE LTD SAXON BUSINESS PARK STOKE PRIOR BROMSGROVE WORCESTERSHIRE B60 4AD TEL: +44 (0)1527 575788 FAX: +44 (0)1527 575789 design@imagetechniques.co.uk	CLIENT: OASIS SITE ADDRESS:	DRAWING TITLE: PROJECTOR TYPE 2 NON ILLUMINATED PROJECTION SIGN				JOB No: N/A	REVISIONS / NO / DATE
		DATE: 21.4.08	SCALE: 1:1.5 @ A3	DRAWN BY: M.R.W	CHECKED BY:	DRAWING No: Oasis\General Spec\Projector Type 2	