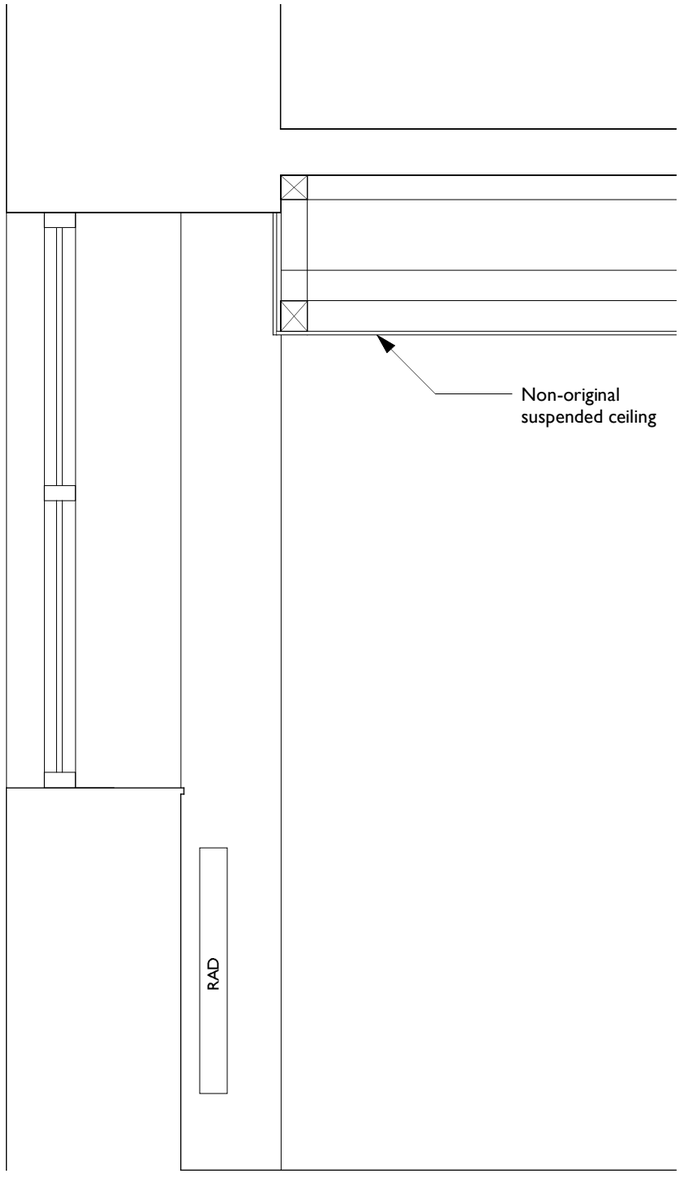

Detail 1

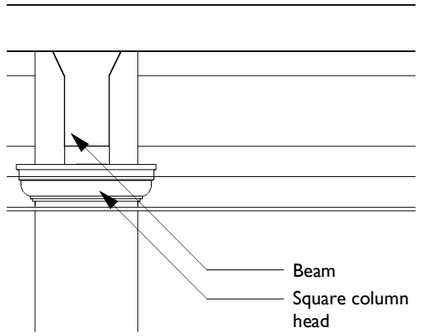

Detail 2

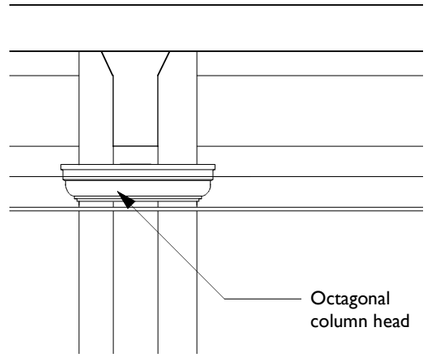

Detail 3

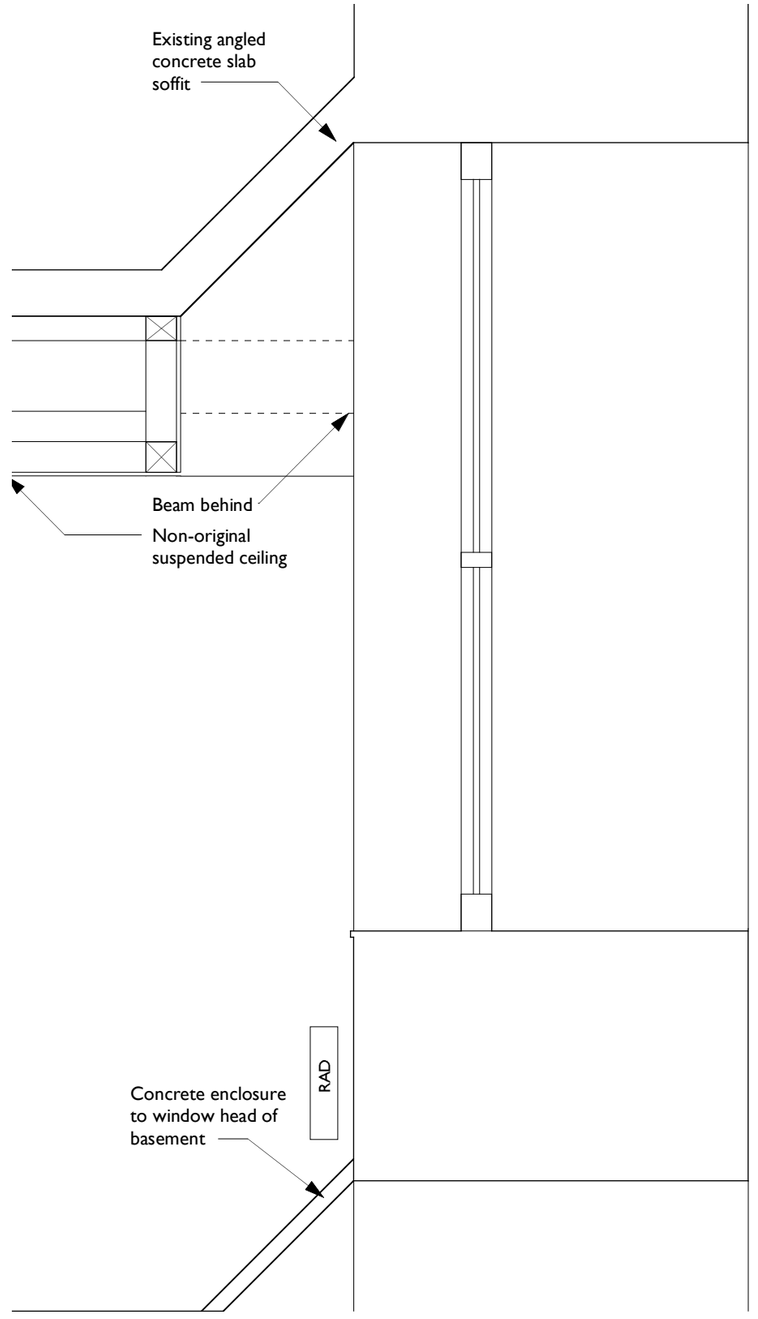

Detail 4

description	date	rev
1.0 Minor correction	July 12	A

Churchgate House - Ground Floor Suite 1
for
CBRE

Details
Existing

scheme 1450
no. **E(400)**
rev A

scale **1:20@A3**
date June 2012
drawn HKW

makinarchitecture
URBAN ARCHITECTS & DESIGNERS
www.makinarchitecture.com
t 0161 236 0051
e architect@makinarchitecture.com

COPYRIGHT OF MAKIN ARCHITECTURE
DO NOT SCALE FROM THIS DRAWING
DIMENSIONS TO BE CHECKED ON SITE

***SK** sketch **P** proposed **T** tender **C** construction **AB** asbuilt*