notes

- The contractor is responsible for checking dimensions, tolerances and references. Verify any discrepancies with the Architect before proceeding with the works.
- Where an item is covered by drawings to different scales the larger scale drawing is to be worked to.
- Do not scale drawing. Figured dimensions to be worked to in all cases.

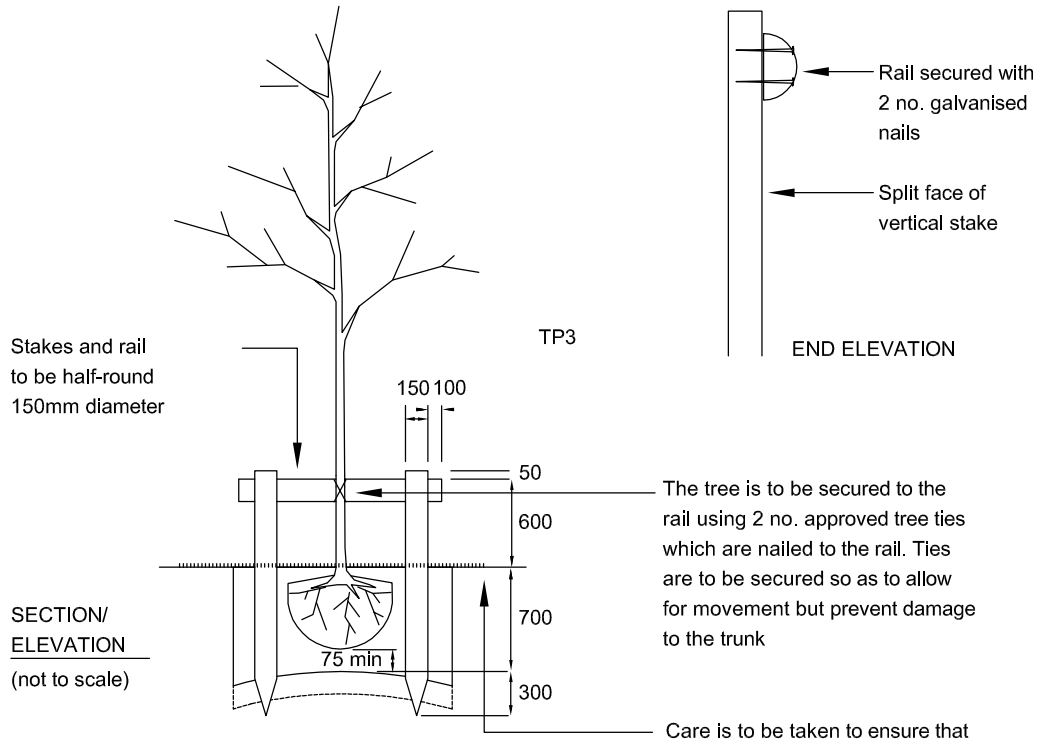

NOTES:

1. The tree pit should be excavated to allow adequate clearance between the perimeter of the ball and the side of the pit.
2. The depth of the pit should be 1000 x 1000 x 750mm greater than the depth of the root-ball.
3. Fork the bottom and sides of the pit to break up the subsoil.
4. Mix the dug soil with a) a slow release fertiliser eg Ficote 140, b) a quick release fertiliser eg John Innes base fertiliser, c) Fisons soil improving compost.
5. Drive in the stakes so that they are a minimum of 300mm below the bottom of the pit and 650mm above ground level. The stakes and rail are to be sweet chestnut or peeled larch poles, pointed at one end, preserved to resist rot for their intended lifespan, and strong enough to take nails without splitting.
6. Plant the tree, ensuring that the original depth is maintained and the soil is carefully firmed back up to the existing ground level.
7. Secure the rail to the stakes with 2No. galvanised nails per stake.
8. Secure the tree to the rail as described in the notes above.
9. Spread 75-100mm depth of mulch over an area of 1000mm diameter around the tree, and maintain for 12 months.

date	rev	revision/author/checker
-	-	-

drawn CA
checked GIL
scale NTS
date APR 2011

project MILES PLATTING PFI
CENTRAL PARK

drawing EHS TREE PIT
DETAIL 1 of 5

purpose of issue
PLANNING

drawing no A2856LE/6.3/203

rev

PRP Architects © Century House 11 St Peters Square Manchester M2 3DN T 0161 242 8950 F 0161 242 8955 man.prp@prparchitects.co.uk