ISSUE	DATE	NOTES	APP
A	28-07-2008	For Planning	

ANNING
REF.
RECD 2008
INIT
REC'D

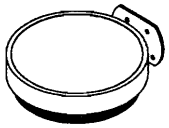

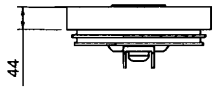

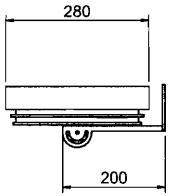

SCALE 1:10 @ A3

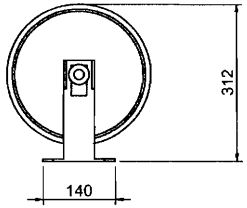

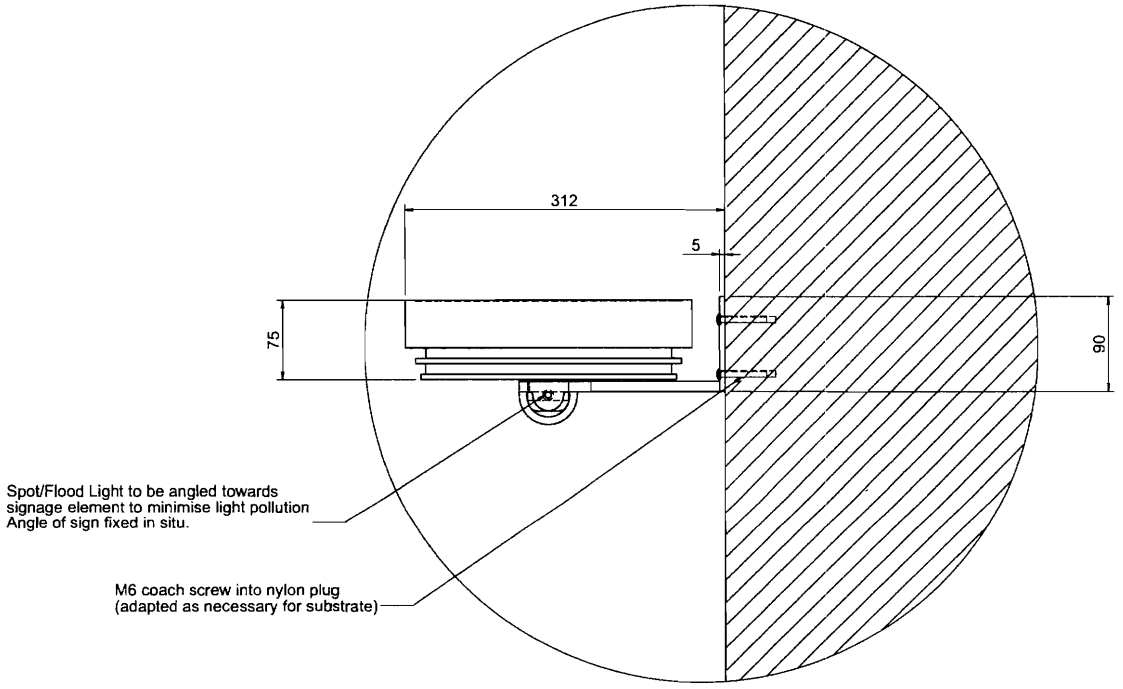

DETAIL A
SCALE 1:5

Power Consumption = 36W per light
Powered by LEDs

This casing used by both Spot Lights and Flood Lights

Spot light beam - 5°
Flood light beam - 25°

Weight - 1.55kg
Lifetime - 50 000hrs at 50°C
Casing finished Silver.

ENDPOINT LTD.
165 TOWER BRIDGE RD
LONDON
SE1 3LW
TEL: 020 7089 2670
FAX: 020 7089 2671
www.endpoint.co.uk

Endpoint

TITLE PREMIER INN - Oshino OS Module 36 RGB - Cross Section

MATERIAL				SHRINKAGE	
FINISH		GENERAL WALL		GENERAL DRAFT	
DRAWN BY	G.Knight	CHECKED		SCALE	1:10 @ A3

THIS DRAWING IS NOT TO BE USED FOR MANUFACTURE WITHOUT THE EXPRESS WRITTEN APPROVAL OF CLIENT

ENDPOINT LTD. CONFIDENTIAL. UNOTHORISED COPYING, DISCUSSION & DISTRIBUTION PROHIBITED

THIRD ANGLE PROJECTION

TOLERANCES UNLESS OTHERWISE STATED
0 ±0.5
0.0 ±0.1
0.00 ±0.05

ALL DIMENSIONS IN mm

DRG No. PI - 100 - A