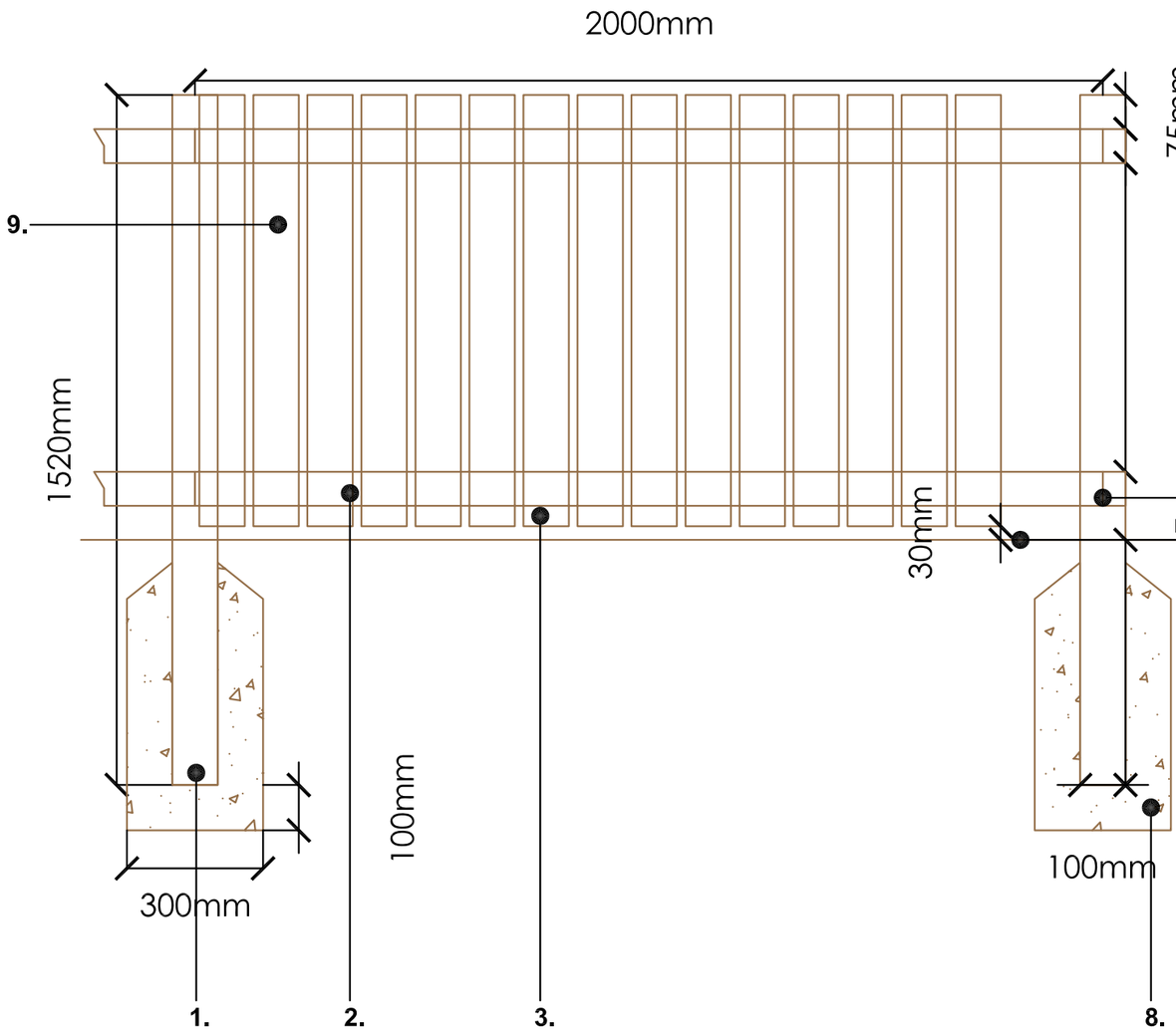

980mm Timber fence with Square Top Elevation

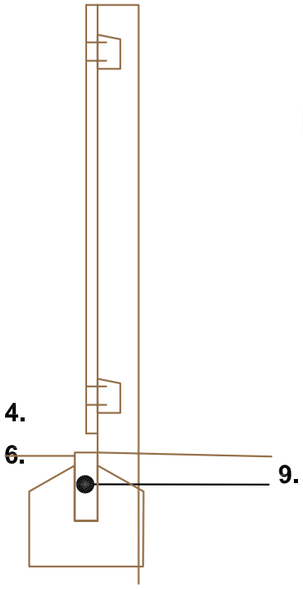

980mm Timber fence with Square Top Section

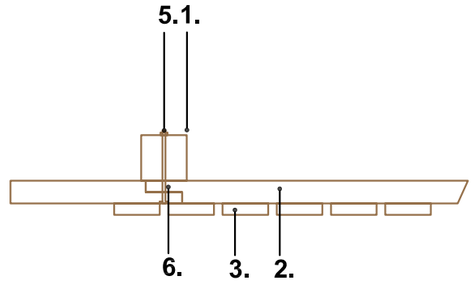

Timber fence with Square Top Plan

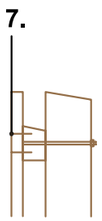

Timber fence with Square Top Construction Section



Boundary Type No 1B (i) - 980mm timber fence

Notes
1) Figured dimensions to be taken. Do not scale dimensions. Contractors must verify all dimensions on site before preparing shop drawings or commencing any work.
2) Copyright © This drawing must not be reproduced without the permission of The Groundwork Trust
3) Reproduced from Ordnance Survey mapping with permission of the controller of HMSO.

© Crown copyright. Unauthorised reproduction infringes Crown copyright and may lead to prosecution or civil proceedings.

Notes:

1. 100 x 100 x 1520mm concrete posts.

2. 75 x 50mm chamfered timber rails.

3. 100 x 25mm timber pales.

4. 80mm lap joint to timber rails at concrete posts.

5. 175 x 10mm galvanised coach bolts to secure timber rail to concrete post at lap joint.

6. 30mm gap below bottom of pale and ground level.

7. Timber pales secured to timber rails with 65mm galvanised ting shank nails.

8. 300 x 300mm GEN1 / ST2 concrete to post.

9. 150 x 50mm PCC kerb with 100mm GEN1 / ST2 haunch and bed to footpath, set 25mm above finish footpath level. Pavement edge to be made good to match existing surfacing.

10. Stain timber fencing in dark oak / charcoal with 2 coats of proprietary woodstain as Cuprinol 'Seasoned oak'.

Note: All wood to be pressure treated to provide 15 year life.

Boundary type no	Height (mm)	Application
1B (i)	980	Front boundaries to highway frontage

Southway Housing Trust

Revisions Notes:

Rev	Date	Notes
A	17-12-10	Adjusted drawing number

GROUNDWORK

CHANGING PLACES CHANGING LIVES

Project: Southway Housing Trust Driveway Improvements

Drawing Title: Boundary Type No 1B (i) Low Boundary Fence Timber

SCALE	DATE	DRAWING NO.	REV	DRAWN BY	CHECKED BY
1:20 @ A4	30.09.10	1612-034	A	AP	PH

Groundwork in Manchester, Salford, Stockport, Tameside & Trafford.
Timber Wharf, 42-50 Worsley Street, Castlefields Manchester, M15 4LD Tel: 0161 220 1000