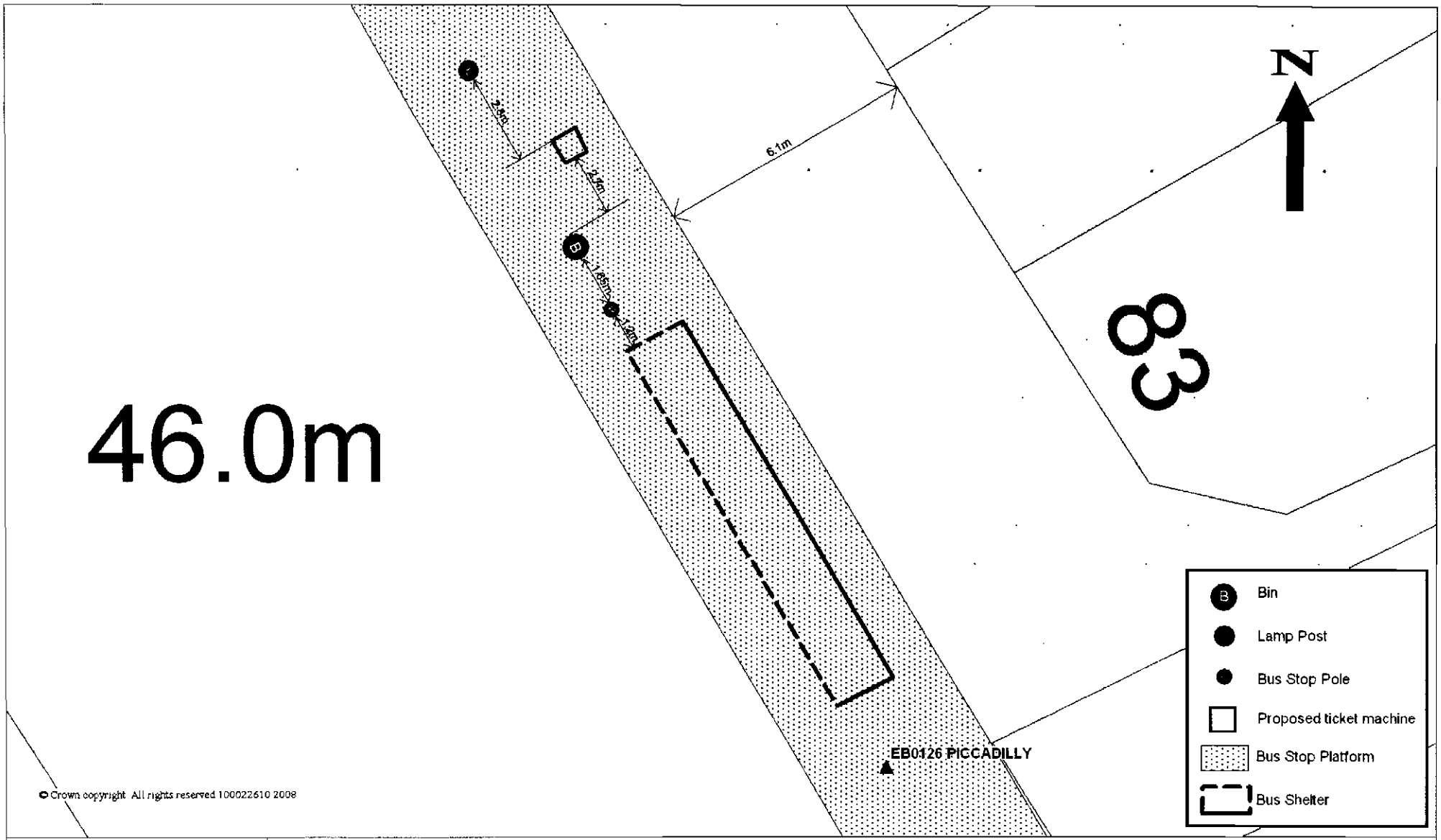

GMPTE

EB0126 - Site Plan for Piccadilly

Drawn By : P.Wallwork	Scale : 1:100	Date : 3/3/2008	

4 Street Furniture

a) Layout

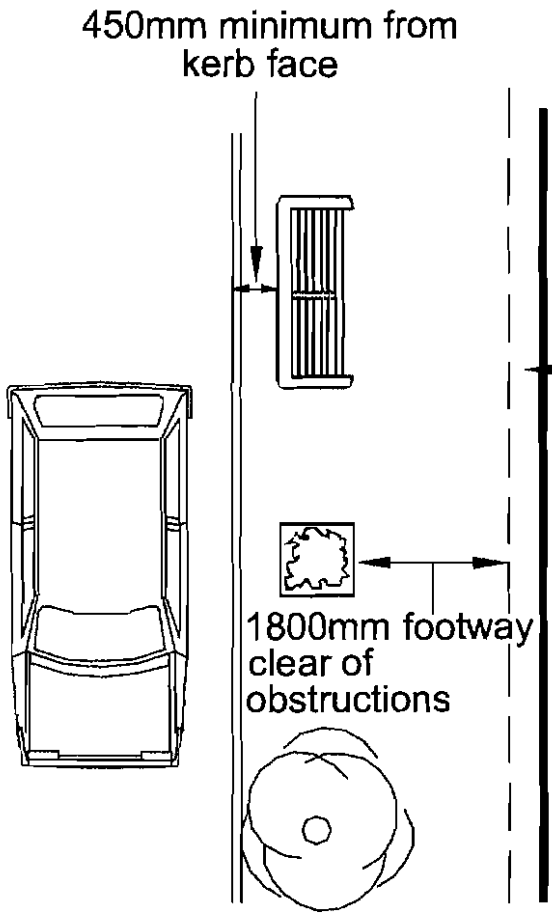

Provide a textured surface around any obstacle or item of street furniture that cannot be removed from the line of walk

b) Section

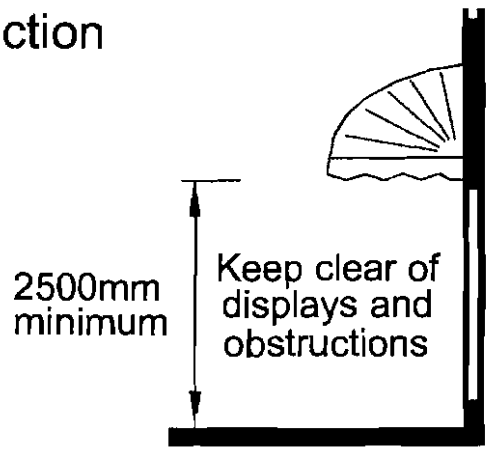

Provide headroom of at least 2500mm between any footway and the underside of any projection

Not to Scale