IT Strategy Programme &

Design and Access Statement

AIRPORT ANPR

Manchester City Council Planning Application

Ringway Road

Distributed to:

Name	Role	Department
Bob Kelsall	Highway Management Officer	Network Management Group Environment & Operations Dept Manchester City Council

CONTENTS

Section		Page No.
1	Introduction	3
2	Scope	4
3	Proposed Outwood Lane ANPR Site	5
	3.1. Location	*5*
	3.2. Site Satellite	*6*
	3.3. Site Diagram	*7*
	3.4. Installation Details	*8*

Attached Documents

Appendix A – Column Spec

Appendix B – Stinger Spec

Appendix C – Cobra Spec

Appendix D – Column & Camera Sketch

Appendix E – Method Statement

Appendix F – Risk Assessment

Appendix G – Proposed Signage during Works

Appendix H – Street Works Cards

Document Control Form

Project ID: **91144**
Product Reference: **MCC ANPR Planning Application - Outwood Lane.doc**

Version	Author	Remarks	Date
1.0	M.George	Final Version	1st April 2008

1 Introduction

The NCPP commissioned the Olive Group to conduct a security review of 46 strategic air and seaports across the UK with the emphasis on ANPR and CCTV provision. Manchester Airport was identified as a key port, with no working ANPR capability. Given the size and strategic importance of the airport it was identified as a high priority port for the implementation of a solution.

The Olive Group report details an ANPR solution that monitors inbound and outbound traffic on all 5 routes in and out of the airport. Each site is covered in detail and proposed ANPR camera sites were suggested.

Greater Manchester Police, alongside airport representatives, Metronet, the proposed suppliers of the radio equipment for camera connectivity and Genesis, the proposed supplier of the ANPR cameras, conducted a further survey of the 5 routes to determine if the sites identified in the Olive Group were the most effective sites or whether other issues had affected these sites since the report was commissioned.

2 Scope

This document will detail the proposed installation at Ringway Road and will identify the infrastructure changes that will be need to be implemented at this site and as such will seek development and planning approval for the infrastructure changes to take place.

The 5 camera locations, and specifically the Ringway Road camera location, are indicated on the following map of the airport.

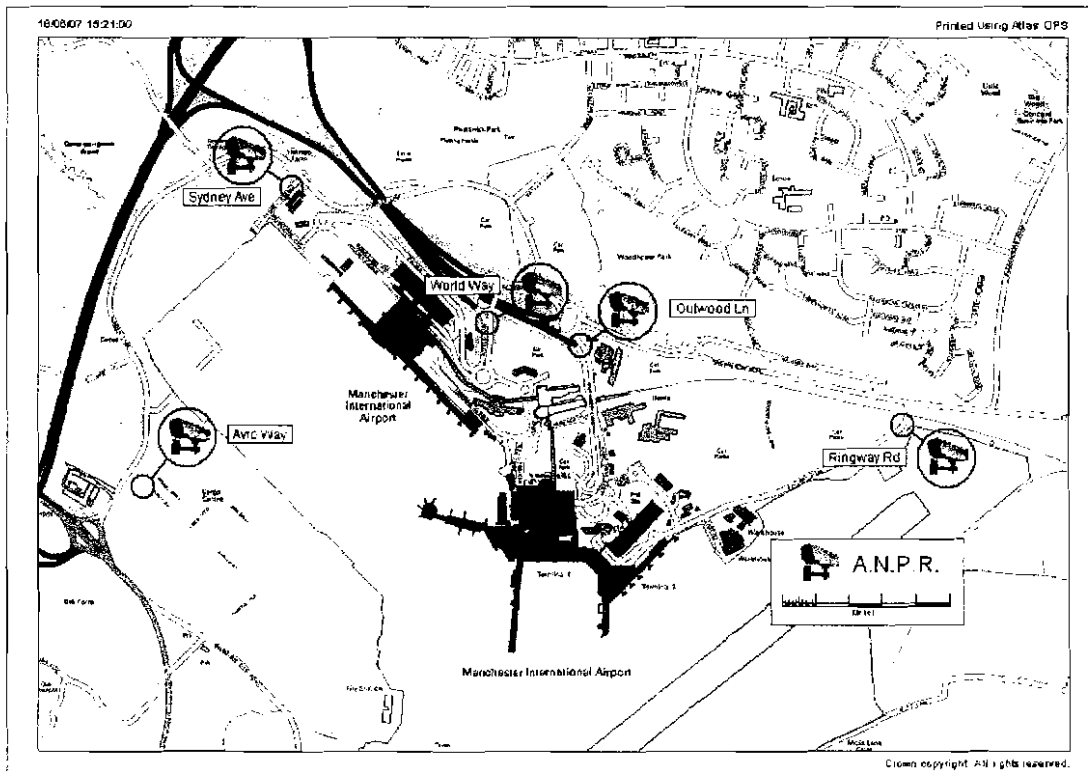

Proposed Ringway Road GMP ANPR Site



Red circle denotes location of proposed ANPR column and cameras. The footprint of the installation is a 1meter square concrete foundation with a 450mm square steel baseplate on which the pole is mounted

3 Proposed Ringway Road ANPR Site

3.1. Location

Ringway road runs from the junction with Ringway Road West to the east side of Terminal 3. The site comprises of 1 inbound and 1 outbound lane.



Fig. 1 – Ringway Road Overview

3.2. Site Satellite

The camera system would be mounted on an 8m column, spec in Appendix A, located on the red circle on the image, with power supplied from an existing reliable source via the route shown in yellow.

The column would have 2 cameras installed, each camera covering a single lane, with the cameras mounted at a height of 5m from the road surface. The radio equipment would be mounted at the top of the column, see Appendix D for a mock-up of the installation

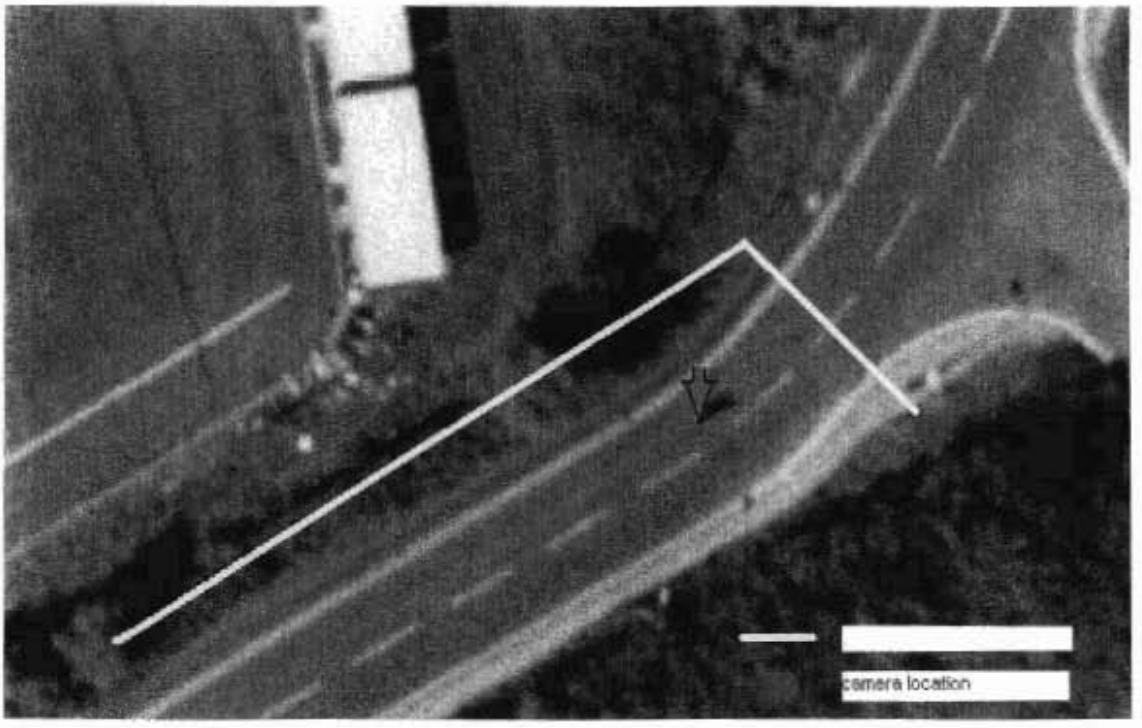

Fig. 2 – Ringway Road Detail

3.3. Site Diagram

The following is a site diagram of the installation site

Ringway Road ANPR Site
(City Council Control)

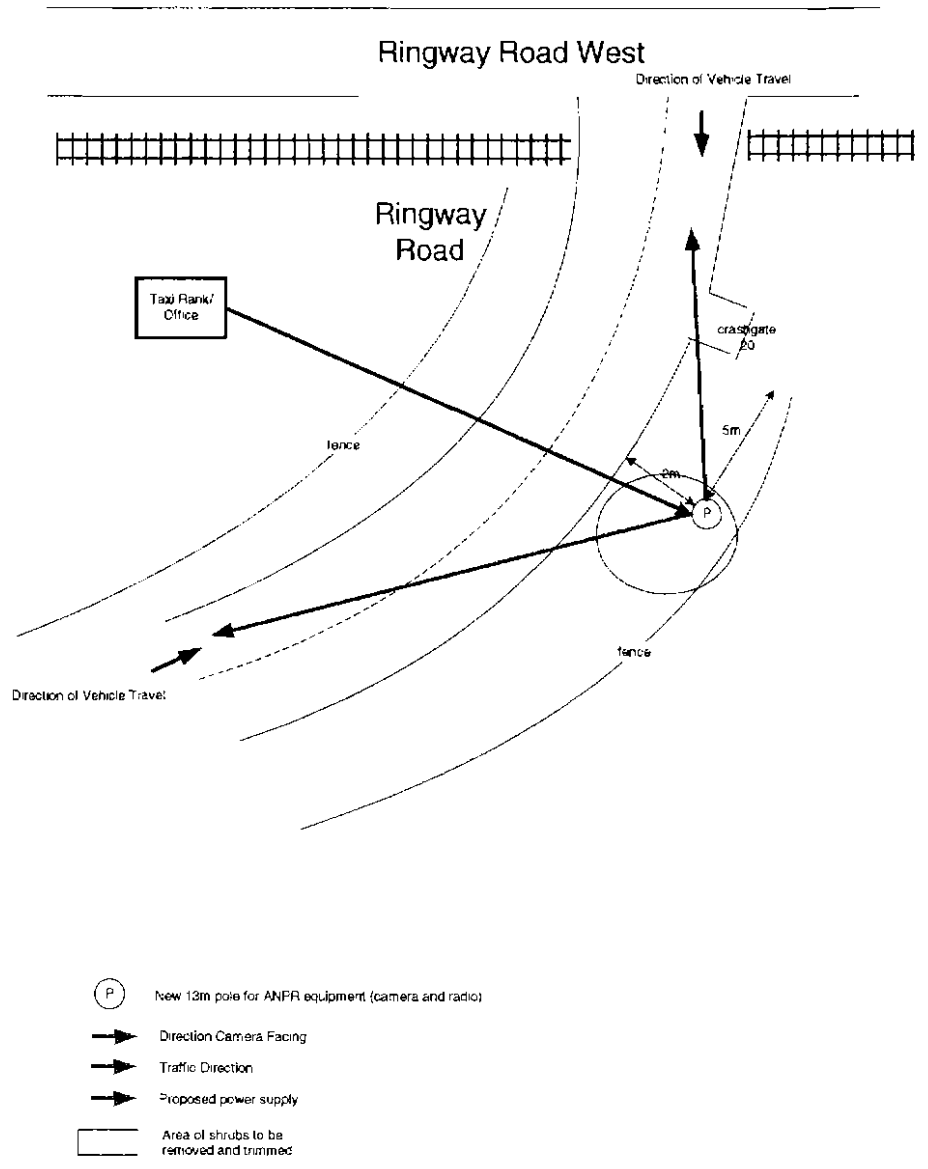

Fig. 3 – Ringway Road Site Diagram

3.4. Installation Details

a) Power

There are no suitable existing power supplies to the location so power is to provided from a feeder pillar in the taxi feeder park, adjacent to the outbound lane, via underground ducting to the single column on the opposite side of the road. This supply will then power the cameras and radio equipment mounted on the column.

b) Columns

1 x 8 metre column to be installed in the ground adjacent to the inbound carriageway, as indicated above. Specification of column detailed in Appendix A. The column will be bolted to a foundation consisting of a $1m^3$ block of concrete.

c) Excavation Work

Groundworks will be required to allow power to be supplied to the column in the inbound verge from the feeder pillar in the taxi feeder park. There is no ducting present to the column so this ducting will need to be installed. See Appendix E for Method Statement for this work, Appendix F for Risk Assessment, Appendix G for proposed signage, Appendix H for Street Works Cards

d) Equipment to be Installed

- 1 Stinger/Cobra camera configuration mounted, on column P, approximately 5m from ground level. One camera covering the inbound lane, the other covering the outbound lane. Cameras will be mounted side by side to the road side of the column, see Appendix D for configuration, Appendices B & C for camera specs
- 1 radio transmitter, mounted at the top of the column P, to transmit data from the cameras to the basestation within the airport. See Appendix D for configuration.

Fixed Tubular Column FMT Range

Click for Technical Specifications ***TECHNICAL***

camera mounting **solutions**



Click image for a larger image

The highly popular FMT ranges offer an extremely cost effective, unobtrusive, yet practical solution to many camera mounting scenarios. This versatile tubular CCTV column is supplied with lockable access door, backboard for terminations and in the cases of columns up to 6 metres, a standard ladder support bracket. Suitable for installation in all areas this range remains the specifiers preferred cost conscious choice.

Design features

- A cost effective solution for achieving desired camera height
- Off the shelf heights up to 8 metres
- Excellent stability characteristics for minimum camera movement
- Suitable for public access areas.
- A desirable column where aesthetics are of importance.
- Flange mounted type root - 'FM'
- Direct buried column versions - 'DB'
- 'Pocket' type roots available for restricted foundation locations
- Totally concealed cable management facility
- Ladder support brackets standard on columns up to 6 metres. (FMT only).
- Hot dipped galvanised finish for maximum weather protection & low maintenance requirements
- Custom & bespoke versions tailored to customers requirements.

General Specification

- Standard pan & tilt fixing of 101.6 PCD
- Inspection / jointing aperture with backboards as standard feature
- Compatible with WEC adaptors, accessories & anti climbs
- Heavy duty version loadings up to 50 kg.

Actual Photograph of a 2 camera ANPR installation

This was the picture published in the Evening News last week and is one of our current installations in the city centre.

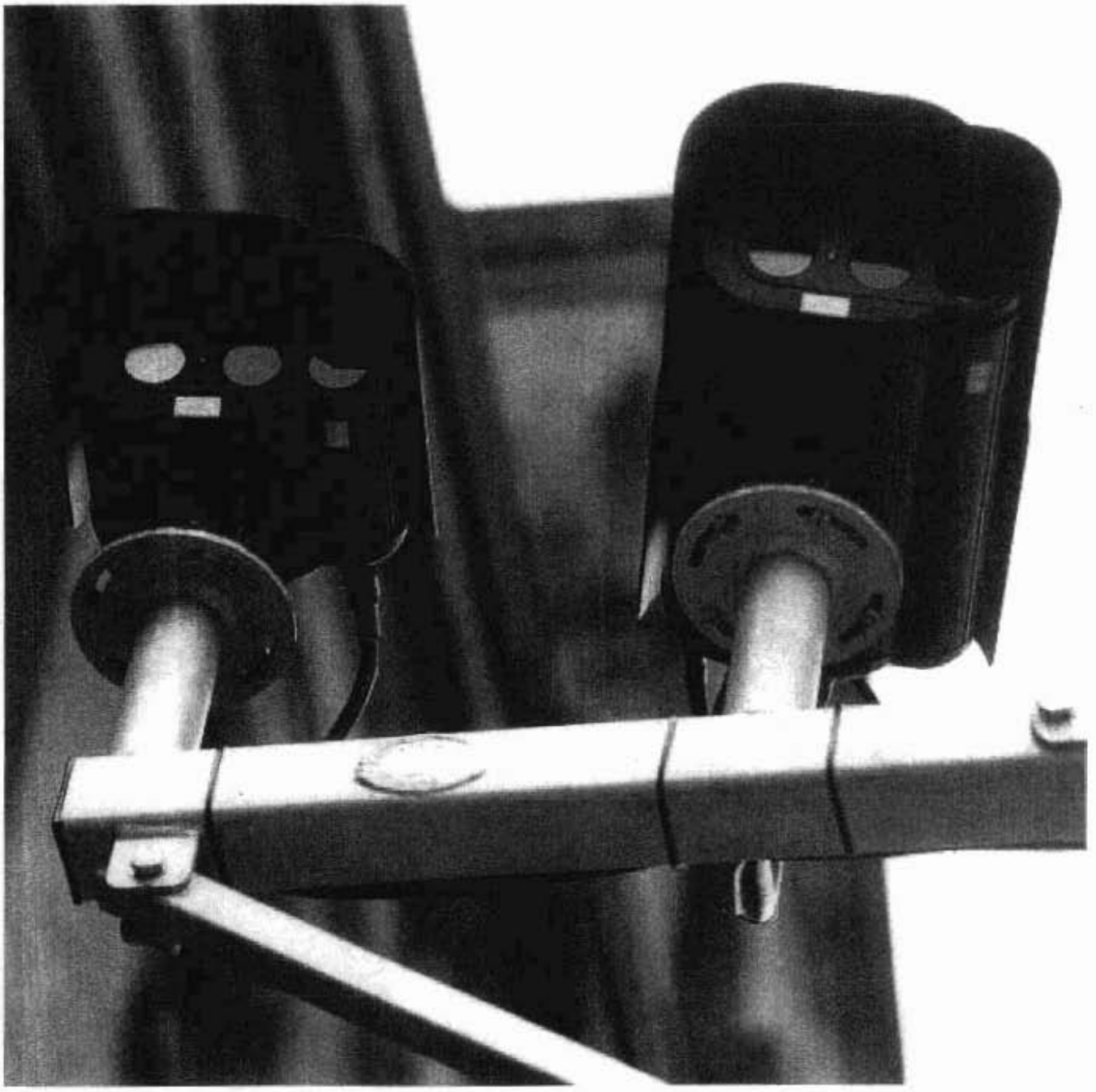

This will be the exact configuration for Ringway Road.

Outwood lane will have 2 sets of cameras I this configuration one hung off each side of the column.

Fixed Tubular Column FMT Range

Click for Technical Specifications TECHNICAL

camera mounting **solutions**

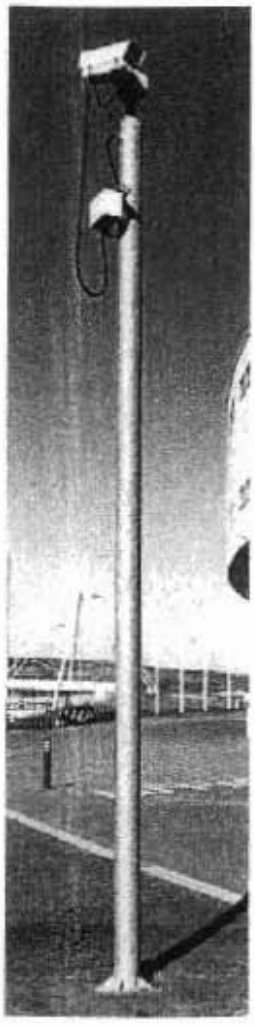

Click image for a larger image

The highly popular FMT ranges offer an extremely cost effective, unobtrusive, yet practical solution to many camera mounting scenarios. This versatile tubular CCTV column is supplied with lockable access door, backboard for terminations and in the cases of columns up to 6 metres, a standard ladder support bracket. Suitable for installation in all areas this range remains the specifiers preferred cost conscious choice.

Design features

- A cost effective solution for achieving desired camera height
- Off the shelf heights up to 8 metres
- Excellent stability characteristics for minimum camera movement
- Suitable for public access areas.
- A desirable column where aesthetics are of importance.
- Flange mounted type root - 'FM'
- Direct buried column versions - 'DB'
- 'Pocket' type roots available for restricted foundation locations
- Totally concealed cable management facility
- Ladder support brackets standard on columns up to 6 metres. (FMT only).
- Hot dipped galvanised finish for maximum weather protection & low maintenance requirements
- Custom & bespoke versions tailored to customers requirements.

General Specification

- Standard pan & tilt fixing of 101.6 PCD
- Inspection / jointing aperture with backboards as standard feature
- Compatible with WEC adaptors, accessories & anti climbs
- Heavy duty version loadings up to 50 kg.

• Variety of standard heights up to 12 metres.

Product reference codes

Tubular Columns:
• FMT3* • FMT4* • FMT5* • FMT6* • FMT8* • FMT10 • FMT12
• FMT5HD* • FMT6HD* • FMT8HD • FMT10HD

• DBT3 • DBT4 • DBT5 • DBT6 • DBT8 • DBT10
• DBT5HD • DBT6HD • DBT8HD • DBT10HD
* *Ex - stock items*

Fixed Tubular Column FMT Range

Click back for General Information ***GENERAL INFO***

camera mounting **solutions**

Model Ref	'M' Height	Duty rating	Baseplate size 'BxB'	Cable access hole Ø'C'	Tube diameter 'D'	Door aperture 'H' x 'W'	Maximum equip cap'ty	Weight Kgs
FMT4	4 metres	Standard	450x450	Ø127	Ø139	355 x 90	50Kg.	75.1Kg
FMT5	5 metres	Standard	450x450	Ø127	Ø139	355 x 90	50Kg	120.7Kg.
FMT5HD		Heavy duty	450x450	Ø155	Ø168	360 x 110	75Kg	142Kg.
FMT6	6 metres	Standard	450x450	Ø127	Ø139	355 x 90	50Kg	137.3Kg.
FMT6HD		Heavy duty	450x450	Ø155	Ø168	360 x 110	75Kg.	162.1Kg
FMT8	8 metres	Standard	450x450	Ø155	Ø168	360 x 110	50Kg	196.3Kg
FMT8HD		Heavy duty	450x450	Ø200	Ø219	455 x 110	75Kg	244.9Kg
FMT10	10 metres	Standard	450x450	Ø200	Ø219	455 x 110	50Kg	317.5Kg
FMT10HD		Heavy duty	450x450	Ø250	Ø273	455 x 116	75Kg	469.3Kg
FMT12	12 metres	Standard	450x450	Ø250	Ø273	455 x 116	50Kg	552.1Kg

All dimensions in mm unless otherwise stated

Standards Applicable

Structural Steelwork
BS EN 10210-1:1994,
BS EN 10210-2:1997

General Steelwork
BS1449:1991, BS1387:1985
BS EN 10025:1993

Hot Dipped Galvanized
BS EN ISO 1461:1999

Welding Procedures
Comply with BS5135:1984

Fasteners
Grade 8.8 BS3692:2001, BS4190:2001,
DIN931, DIN934

Design Wind Loading
In accordance with CP3 chapter
V Pt 2 & BS 6399 Pt 2:1997

Paint finishes
BS4800 & RAL colour range

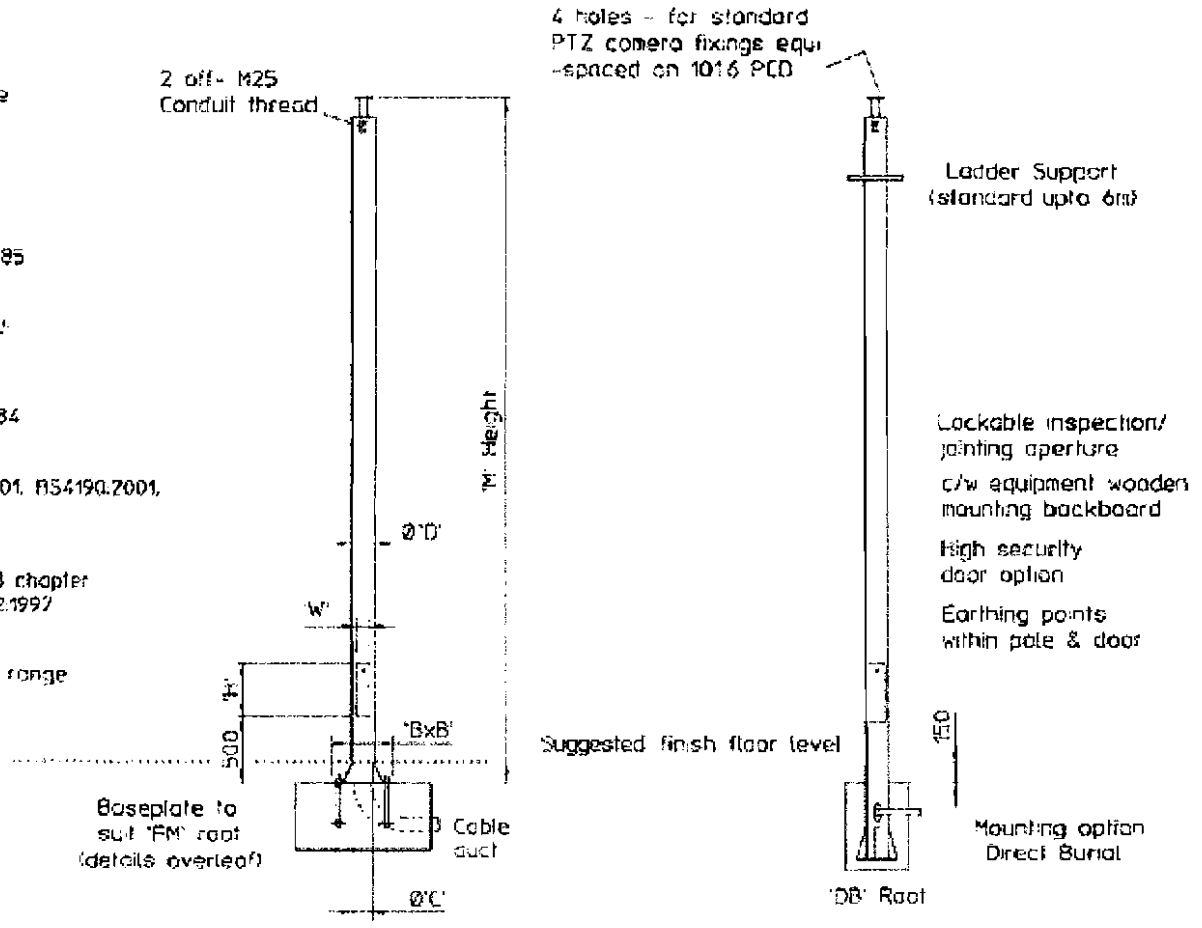

Accessories & Adaptors

ACB	Anti Climb Bracket
Paint	Paint to BS4800 & RAL colours
SDA	Swept Dome Adaptor
SDA2	Swept Dome Adaptor Dual
PT1\S2	1 Pan & Tilt c/w 2 Static Adaptors
TPTA	Twin Pan & Tilt Adaptor
4SA	Quadruple Static Adaptor
3SA	Triple Static Adaptor
2SA	Twin Static Adaptor
1SA	Pan & Tilt - Single fixed
CS150 300	Column Spacers 150mm 300mm
TBC	Telemetry clamp bracket
HSD/H	High security door option
DB	Decorative banding

Product Reference and Ordering Informatio

FMT 4 HD D

Flange Mount Tubular Column

Column Height in Metres

Heavy Duty Column
when minimum deflection is required
ie high zoom lens camera

Direct Burial Root

STINGER Intelligent ANPR Camera

The Stinger Intelligent Automatic Number Plate Recognition Camera has cameras, illuminator and processor all fully integrated in a single sealed unit offering ease and simplicity of installation. The Stinger is designed to process and recognise licence plates and associated imagery and then transmits results using its integral communication interfaces. Communication options include GSM/GPRS or 3G and 802.11g WLAN and 100Mbps Ethernet.



The Stinger camera components are based on Appian's high performance Cobra Camera. Users can select a range of camera and IR illumination options offering unmatched flexibility, including dual cameras and long range illumination options. A principal feature of Stinger is the use of high resolution optical zoom cameras - both for ANPR and high definition overview/contextual imaging. Zoom functionality means the Stinger system can be rapidly optimised to suit differing plate and environmental conditions at ANPR capture points. All camera settings can be controlled and adjusted remotely in real time.



The processor element takes imagery from the camera and runs the plate recognition processes. Neural network Talon ANPR software is used as standard, Stinger can support additional recognition engines. The processor is a powerful mini computer specifically developed for military image processing applications. Featuring a 20GB hard drive and a Windows OS local hotlists can be securely stored and managed. This feature allows the Stinger to be directly connected to any web based services such as BOF2. The choice of processor and Windows OS offers great flexibility; additional electronic sensors, devices and applications can be readily integrated. These include (but are not limited to DSRC/RFID), speed and red light detection devices - all connected to and controlled by Stinger.

The robust processor is designed to operate in harsh environmental conditions including extreme temperature fluctuations. The processor is capable of handling up to 4 separate video inputs, each Stinger has the capability to connect and process imagery from a 'slave' Cobra dual ANPR camera.



A telemetry interface can be provided as an option to control a pan and tilt head for both the Stinger and slave Cobra ANPR camera. This allows users to reconfigure cameras for different traffic conditions.

A Stinger ANPR system requires minimal installation and its discreet appearance has little impact on the environment, making it an ideal stand alone ANPR surveillance system.

APPIAN Stinger

Appian Technology Plc
Appian House, Wessex Road,
Bourne End, Buckinghamshire,
SL8 5DL United Kingdom
Tel: +44 (0) 1628 554 750
Fax: +44 (0) 1628 554 751
Web: www.appian-tech.com
Email: sales@appian-tech.com

For More information on this product please contact our sales team direct.
Tel:+44 (0) 1628 554750
E-mail: sales@appian-tech.com
Web: www.appian-tech.com

APPIAN TECHNOLOGY PLC

STINGER Intelligent ANPR Camera

SPECIFICATIONS

Processor:	1.4 Ghz Intel Pentium M Processor 512 MB (Option of 1GB) 20GB Disk Windows XPe - Embedded 4 x Independent Colour Streams - 75 Ohm I/P GSM/GPRS GPS (USB External Option) 802.11g 4 x USB 2.0 2 x RS232 full Modem 2 x RS232 simple Analogue VGA O/P 802.3 100Mb/s 5v conditioned DC power output Environmental Temperature Range -20°C to +50°C
Camera Configurations:	Single and dual configurations
Camera Options:	Monochrome - CCIR or EIA Colour - PAL or NTSC
Illumination Options:	810nm, 870 nm, 950nm Integrated Light Sensor Can be used to measure the daylight and alter the camera's settings to optimise the video.
Operating Voltage:	12 - 24V DC power input 110 to 240 V AC (Using external Power supply/interface unit)
Power Consumption:	40 W
Dimensions:	**Camera:** H 91.07mm X W 180.17mm X D 364 mm **Camera with Bracket:** H 176.88mm X W 180.17mm X D 364mm
Weight:	**Stinger:** 4kg **Stinger with sun shield & Bracket:** 4.2kg
Environmental:	**Sealing:** IP 67 **Temperature:** Storage -20°C to + 60°C Operational -20°C to + 50°C **Wind Loading (mounted on Stinger mounting bracket):** 160 Kph (45m/s)
Accreditations & Approvals:	CE FCC
External Connections:	• USB X 2, Ethernet, Power in • Slave Camera • GSM/GPRS Antenna • WiFi Antenna • USB for external GPS Engineering (KVM)

For More information on this product
please contact our sales team direct.
Tel:+44 (0) 1628 554750
E-mail: sales@appian-tech.com
Web: www.appian-tech.com

Due to a policy of continued product development, Appian Technology PLC reserves the right to alter or amend any published specifications without notice.

APPIAN TECHNOLOGY PLC

COBRA ANPR Image Capture System

The Cobra Automatic Number Plate Recognition Image Capture system has been designed to read vehicle licence plates day and night, in the most demanding conditions. The Cobra system can be supplied with a range of different internal camera and IR illumination options offering unmatched flexibility - suitable for any ANPR application including mobile, fixed and long range ANPR.



A principal feature is the use of high resolution optical zoom cameras – both for ANPR and high definition overview/contextual imaging. Zoom functionality means the Cobra system can be rapidly optimised to suit differing plate and environmental conditions at ANPR capture points. The Cobra can be easily moved from one location to another and the settings simply adjusted – avoiding the need for time consuming, risky and costly re-lensing.



Globally, number plates have widely differing characteristics and contrasts. The Cobra overcomes this problem by having a choice of IR wavelengths available - 810,870 and 940NM. Zoom functionality enables the cameras field of view to be optimised to local plate sizes. Additionally, both IR pulse duration and illumination power can be adjusted by the user. In its long range dual illuminator configuration the camera has a range of up to 45 metres (subject to wavelength).

Obtaining high confidence recognition results in bright sunlight, when plate characters are partly shaded is a significant challenge. At night time the effect of bright headlights needs to be suppressed to improve the accuracy of recognition. The Cobra has a number of features designed to combat these problems, including improved processing gain and narrow band IR filtering.

KEY FEATURES

Compact & Lightweight ANPR image capture system
Flexible range of camera modules and illumination options
Suitable for both mobile and fixed applications
High environmental specification
High reliability
Easy to use and maintain





APPIAN TECHNOLOGY PLC

cobra ANPR

Appian Technology Plc
Appian House, Wessex Road,
Bourne End, Buckinghamshire,
SL8 5DT. United Kingdom
Tel: +44 (0) 1628 554 750
Fax: +44 (0) 1628 554 751
Web: www.appian-tech.com
Email: sales@appian-tech.com

For More information on this product please contact our sales team direct.
Tel:+44 (0) 1628 554750
E mail: sales@appian-tech.com
Web: www.appian-tech.com

APPIAN TECHNOLOGY PLC

COBRA ANPR Image Capture System

SPECIFICATIONS:

Cobra Image Capture System Configurations:

Single Configuration: Single illuminator - Single monochrome ANPR camera
Dual Configuration: Single illuminator - Single monochrome ANPR camera - Single colour camera for overview imaging
Long Range Configuration: Two illuminators - Single monochrome ANPR camera

Camera specifications:

Monochrome Camera Module

Lens:	18X Zoom f=4.1 mm (wide) to 73.8 mm (tele), F1.4 to F3.0
Signal System:	EIA/CCIR
Image Sensor:	Exview HAD CCD
Angle of View (H):	48 degree (wide end) to 2.7 degree (tele end)
S/N Ratio:	More than 50 dB
Electronic Shutter:	1/50 to 1/10,000 Sec. 16 steps
Gain:	Auto / Manual (-3 to 28 dB, 2 dB steps)
Camera Operation Switch:	Zoom tele, Zoom wide
Video Output:	VBS: 1.0 Vp-p (Sync. negative) Y/C Output Colour - PAL or NTSC

Colour Camera Module

Lens:	18X optical zoom f=4.1 mm (wide) to 73.8 mm (tele), F1.4 to F3.0
Image Sensor:	Exview HAD CCD
Angle of View (H):	48 degree (wide end) to 2.8 degree (tele end)
S/N Ratio:	More than 50 dB
Electronic Shutter:	1/50 to 1/10,000 Sec. 16 steps
Gain:	Auto / Manual (-3 to 28 dB, 2 dB steps)
Camera Operation Switch:	Zoom tele, Zoom wide
Video Output:	VBS: 1.0 Vp-p (Sync. negative) Y/C Output
IR Illuminator Options:	810nm, 870nm, 940nm - variable pulse duration and illumination power
Integrated Light Sensor:	Measures the daylight, and can alter the camera's settings to optimise the video
Communications:	Bi directional RS 232 communications with PC's. Allows settings to be downloaded to the camera, and uploaded to the computer. Camera settings can be stored off-site, and sent into the camera. This eases maintenance and allows a central database to store and retrieve camera settings.
Cable:	RS232, power and video, all galvanically isolated
Connectors:	Metal shell connectors
Mounting Bracket:	Full 3 axis gimballed mount
Heat shield:	Available as an option, use of the heat shield is recommended in environments where high heating through exposure to sunlight is encountered
Operating Voltage:	9 to 40 V DC 12 to 24 V AC 110 to 240 V AC (Using external Power supply/interface unit)
Power Consumption:	8 W typical
Dimensions:	Camera: H-90mm X W-80mm X D-185mm Camera with sun shield: H-115mm X W-90mm X D-20mm Bracket: H-80mm
Weight:	Camera: 1.7 KG Camera with sun shield: 1.8 KG Camera with Bracket: 1.8 KG
Environmental:	Sealing: IP 67 Temperature: Storage - 20° C to + 60° C Operational - 10° C to + 55° C Wind Loading (mounted on Cobra bracket) - 160 Kph / 45m/s
Accreditations and Approvals:	CE A & S (Vid G 5) FCA - E Mark FCC

For More information on this product please contact our sales team direct.
Tel:+44 (0) 1628 554750
E-mail: sales@appian-tech.com
Web: www.appian-tech.com

Due to a policy of continued product development, Appian Technology PLC reserves the right to alter or amend any published specifications without notice.

APPIAN TECHNOLOGY PLC

R. & M. DEVELOPMENTS LTD.

Excavation : Plant Hire : Demolition
Civil Engineers and Minor Building Contractors

Incorporating **AIRPORT SERVICES AND PLANT HIRE LTD.**

55 CLIFTON STREET
MILES PLATTING
MANCHESTER
M40 8HF

Telephone: 0161 202 3030
Fax: 0161 202 2120

Email: office@randmdev.co.uk
Website: www.randmdev.co.uk

METHOD STATEMENT

Contract:	Manchester Airport Proposed Automatic Number Plate Recorders
Date:	11th March 2008
Client:	Inviron
Location:	Outwood Lane & Ringway Road Manchester Airport
Project Manager	M. Henry

1. Prior to commencement of work, gain confirmation in writing that all statutory undertakers have been contacted regarding any apparatus they may have in the vicinity.

2. Provide traffic management to each proposed new location as per requirements of Chapter 8, safety at streetworks and roadworks (see enclosed basic layout). On agreement of location of proposed excavations

3. Barrier off proposed areas of work as basic layout, including supply and fit as required heras type fencing for safety security within barriered off areas of work,

4. Subject to existing service surveys (as item 1) CAT scan for any proposed electric services, subject to locating any electric service or identification of any water, gas, drainage or telecommunication services, excavate out trial holes by hand to expose the service. Once exposed, mark up service and barrier off.

5. Using a water cooled diamond saw, saw cut to existing roadway

6. Using a JCB 3CX with hammer, attended by banksman, break surface of road

7. After breaking surface of road, remove hammer and excavate out using 3CX attended by banksman, load spoil onto wagon and cart away to tip

8. Continue excavation to proposed formation level, with attendance of banksman at all times

9. On completion of excavation, consolidate formation, supply and lay 2 number ducts including sand bed and surround, warning tape and draw cord, with 750mm of cover

10. Supply and lay, including consolidate semi dry concrete as backfill to new ducting, leaving 50mm below existing surface finish

11. On completion of works, supply and lay 50mm of tarmac forming a temporary reinstatement

12. Take down barriers and fencing, re-set up to next section and repeat operations 1-11 until work is complete.

13. On completion of all works, return to site within a six month period, provide traffic management as per chapter 8, saw cut either side of the temporary reinstatement to allow for an overlap of the surface course, break out temporary reinstatement and cut section of the existing road

14. Provide bitumen to joints then supply, lay and consolidate tarmac wearing course to match existing surface finishes

15. On completion of works, clean up site and remove barriers

Labour
Foreman, banksman, general operative, machine driver, wagon driver, tarmac gang

PPE
Safety barriers, road signage, cones and barriers, hi-viz jackets, gloves, safety boots, goggles (as required), masks (as required)

Plant
Heras fence, diamond saw, JCB 3CX hammer, 7.5 ton wagon, 8 wheel wagon, trench whacker, roller, compressor, 110v hand tools, hand tools

RISK ASSESSMENT

CONTENTS PAGE

Constructing footpaths/roads and work on existing footpaths/roads	2-3
Work on all excavations	4-6
Work in vicinity of existing services	7-9
Installation of drains, manholes, and fittings + Installation of ducts	10-11
Manual Handling	12-13
Mud or Spillage on road	14-15
Setting up Signs, cones, barriers and fencing on live highway	16-17
Surfacing	18-20
Work adjacent to earthmoving and other mobile plant	21-22
Work adjacent to road traffic	23-24

Risk Assessment – Constructing footpaths/roads and work on existing footpaths/roads

RISK FACTOR

Severity of Harm: Low to High
Likelihood of Occurrence after application of control measures: Low to Medium

PERSONAL PROTECTIVE EQUIPMENT FOR THE ACTIVITY

- High visibility waistcoat/jacket
- Safety footwear

JOB ELEMENTS

Construction of new roads and footpaths to required specification. Alterations and repairs to existing footpaths and roads.

POTENTIAL HAZARDS

Being struck by road traffic or plant.
Tripping hazards on temporary surfaces.
See also risk assessments for work on excavations, work adjacent to traffic and earth moving plant.

POTENTIAL HARM

- Death or serious injury in being struck by traffic/plant
- Minor or potentially major injuries as a result of tripping

NUMBER OF OPERATIVES EXPOSED

All in the vicinity of the works.

NB. Potentially also members of the general public.

CONTROL MEASURES

1 Where necessary, Contracts Manager to apply for partial road closure under the New Roads and Streetworks Act, 1991. The Contracts Manager shall ensure that all necessary requirements are met n terms of lighting, guarding, signage and traffic management.

2 Site Supervisor shall ensure that works are planned to ensure that when they result in a footpath being closed or partially closed, an adequate alternative footpath is provided.

3 The Site Supervisor shall ensure that all foreseeable normal use of the road/footpath is taken into account during planning of the work, e.g., weekly visits of refuse trucks, use of footpaths by disabled people, etc. Site Supervisor shall liase with Client's Representative.

4 The Site Supervisor to ensure that company plant, vehicles, deliveries can safely enter and leave the site and provide a signaller where necessary.

5 All works to be securely barriered off while work is in progress and until the final surface is reinstated. Warning signs to be displayed. The Site Supervisor shall ensure that any necessary lights are provided so that the works are visible at night.

6 Works to be planned to ensure that excavations can be backfilled as soon as possible.

7 Site Supervisor to ensure that areas are reinstated as soon as possible with either required permanent finish or leaving firm even temporary surfaces.

8 Site Supervisor to check completed/temporary surfaces for adequacy prior to their being opened to the general public.

IMPLEMENTATION

Site Supervisor

GUIDANCE INFORMATION

Health and Safety in Construction HS(G)150

DOCUMENTATION
Method statements and site specific risk assessments
Site diary, daily work sheets and on material delivery notes to be filed weekly with the job file
Accident/incident investigations

MONITORING
Managing Director
Safety Officer
All Supervisors

EMERGENCY PROCEDURES
General on site emergency procedures are displayed.

REVIEW OF EFFECTIVENESS
Health and safety monitoring
Accident/incident investigation
Audits
Tool box talks on a regular basis to refresh understanding of protection of road and footpath works
Daily by site supervision.

RECOMMENDED CHANGES
None planned

COMMENTS

PERSON MAKING THE ASSESSMENT
Mr Mark Henry. MCIOB

Risk Assessment – Work on all Excavations

RISK FACTOR

Severity of Harm: Low to High
Likelihood of Occurrence after application of control measures: Low

PERSONAL PROTECTIVE EQUIPMENT FOR THE ACTIVITY

- High visibility waistcoat
- Safety helmet
- Gloves
- Safety footwear
- Ear defenders

JOB ELEMENTS

Shallow excavations <0.6m deep
Medium excavations 0.6m to 1.2m
Deep excavations >1.2m

Excavation, avoidance of existing underground services, protection and support of excavations, working within excavations.

NB. Also refer to risk assessment for Work in Vicinity of Existing Services.

POTENTIAL HAZARDS

Shallow excavations <0.6m deep

- Tripping hazards
- Falling into excavations
- Plant/vehicles falling into excavations
- Contact with contaminated soils
- Contact with existing underground services

Excavations >0.6m and all excavations requiring man access

- Falling into excavations
- Plant/vehicles falling in excavations
- Collapse of excavation
- Material falling into excavations
- Presence of toxic or flammable gases, lack of oxygen
- Contact with contaminated soils
- Contact with existing underground services

POTENTIAL HARM

Shallow excavations

- Broken bones
- Weils disease
- Contact with contaminates
- Fire/explosion/electrocution

Deeper and man entry excavations

- Broken bones
- Weils disease
- Contact with contaminates
- Fire/explosion/electrocution
- Death

NUMBER OF OPERATIVES EXPOSED

All those working in or adjacent to excavations

CONTROL MEASURES

1 The Contracts Manager shall assess any information supplied by the Client in relation to ground conditions and contamination. The Contracts Manager shall determine whether a planned excavation is deep enough to be classified as confined space and if so shall ensure a permit to entry/work system is developed and implemented.

2 All work on excavations will require the setting up of Heras/Pedestrian fencing. For highways work refer to the assessment for signing and coning of the work also. The Heras fencing to trench excavation with shared works, i.e., boundary walls to be checked and maintained daily to prevent pedestrians and tenants especially children entering the area of the works.

3 Site Supervisor to ensure the following prior to authorising any excavation work:

a) Obtain service drawings and map out location of known services on site. NB. These drawings may not be accurate and the absence of services on the drawing should never be assumed to mean absence of services on site.
b) Survey visible indications of service locations.
c) Check all planned excavation locations with CAT prior to commencing any excavation.
d) Banksman available to direct excavations.
e) Possession of Permit to Dig, where contractually required.

4 The Health and Safety Officer shall ensure that the CAT scanner is calibrated and serviced at required intervals and is operated only by trained personnel.

5 Following the checks above, the Site Supervisor shall ensure the following in areas where services are suspected:

a) Locations of suspected services should be marked out
b) Any mechanical equipment used in the work area should only dig or cut to the formation level of the road/footpath and must be under the supervision of a banksman.
c) Spades and shovels should be used in preference to forks or pickaxes
d) Any potentially identified services should be positively identified and the relevant utilities contacted, if necessary, to ensure that they are protected.

NB.
Services may be at other locations than those shown on drawings. They may already be damaged or could be damaged by the action of excavating adjacent to them. This may not have been laid correctly, they may be at shallower depths than those specified by the utilities and there appearance may be deceptive, e.g., gas pipes may look like water mains.

6 The Site Supervisor shall ensure:

- No stockpiling of materials close to the edge of excavation
- No plant to be operated close to the edge of excavation
- Stop blocks to be fixed beyond the edge of excavations where plant/vehicle movements are possible in the vicinity of excavations.

7 All excavations over 0.6m deep and requiring main entry must be assessed by the Site Supervisor for the possibility of the need to use earthwork support, based on the type of ground conditions revealed by the trial holes. All excavations deeper than 1.2m deep will require support or battering back, the extent of which shall be determined by the Site Supervisor.

8 All deep excavations (i.e., 1.2m or deeper) to be inspected prior to each shift by foreman or senior operative on site to confirm continuing stability and the presence of all necessary safety measures, inspections to be logged weekly.

9 Secured ladders to be provided to deep excavations for access/egress . For any deep excavation, the Contracts Manager/Supervisor shall assess information from client on potential contamination, landfill gases, ground conditions that could cause the presence of toxic or flammable gases or lack of oxygen.

10 Excavations unable to be backfilled immediately because of the requirement for future access will be plated to enable traffic movement, any excavations left open overnight will be covered to prevent the access of children. Any areas left barriered off will if necessary be lamped during the hours of darkness. Any changing conditions that effect the operations will be brought to the attention of the client.

11 Work in all excavations present some personal environmental problems to those employed in the work, for this reason personal hygiene is of paramount importance. Operatives should wash their hands each time before eating, smoking or using the toilet.

IMPLEMENTATION
Site Supervisor
Contracts Manager
Operatives

GUIDANCE INFORMATION
Method Statement CIRIA 97 code of practice for trenching
HS(G)185 Health and Safety in Excavations
CIS8 Safety in Excavations

DOCUMENTATION
Site specific risk assessments and method statements
Site diary, daily work sheets and on material delivery notes to be support filed with the appropriate QA job number file
Excavation records

MONITORING
Site Supervisor
Contracts Manager
Health and Safety Officer

TRAINING
Operatives have received safety awareness training to CITB standards when identified as required. Site Supervisor with the responsibility of checking safety of deeper excavations shall have training in the inspection/assessment of excavations

EMERGENCY PROCEDURES
On site emergency procedures are displayed including specific procedures in the event of contact/damage to live services and in the event of the collapse of an excavation.

REVIEW OF EFFECTIVENESS
Health and safety monitoring
Accident/incident investigation
Audits
Tool box talks on a regular basis to refresh understanding of safe manual handling methods
Daily by site supervision.

RECOMMENDED CHANGES
None planned

COMMENTS

PERSON MAKING THE ASSESSMENT
Mr Mark Henry
MCIOB

Risk Assessment – Work in Vicinity of Existing Services

RISK FACTOR

Severity of Harm: High
Likelihood of Occurrence after application of control measures: Low to Medium

PERSONAL PROTECTIVE EQUIPMENT FOR THE ACTIVITY

- High visibility waistcoat/jacket
- Safety helmet
- Gloves
- Safety footwear

JOB ELEMENTS

Excavations in an area where there are potential or known existing underground services.

Use of plant or requirements for access at height in an area where there are existing overhead power cables.

POTENTIAL HAZARDS

Contact with or damage to existing underground services, in particular gas and electrical services – potential electrocution, fire or explosion.

Contact with overhead electrical service or arcing from overhead electrical service – potential electrocution.

POTENTIAL HARM

- Death or serious injury

NUMBER OF OPERATIVES EXPOSED

All those carrying out manual or mechanical excavations.

All those operating plant or working at height in vicinity of overhead power cables.

CONTROL MEASURES

Planning and General Management

Underground Services

1 Site Supervisor to ensure the following prior to authorising any excavation work:
   a) Obtain service drawings and map out location of known services on site. NB. These drawings may not be accurate and the absence of services on the drawing should never be assumed to mean absence of services on site.
   b) Survey visible indications of service locations.
   c) Check all planned excavation locations with CAT prior to commencing any excavation.
   d) Banksman available to direct excavations.
   e) Possession of Permit to Dig, where contractually required.

2 The Health and Safety Officer shall ensure that the CAT scanner is calibrated and serviced at required intervals and is operated only by trained personnel.

Overhead Services

3 The Contract Manager shall note any overhead services on any site visit prior to contact commencement. The Site Supervisor shall also check for overhead services prior to starting work on site.

4 Where plant is working in the vicinity of overhead services or access to height is required, the Contracts Manager shall plan for the following:

a) Consulting the electricity company – confirming voltage of cables and the recommended precautions

b) Arranging the work, selecting the type of plant, etc. to avoid working in the vicinity of the cables.

c) Prohibiting access of plant into areas where there is the danger of potential contact with, or arcing from, the cables.

d) Arrange protection from contact with cables where access at height is required – in particular on scaffolding and by ladder.

Supervision on Site

Underground Services

1 Following the checks above, the Site Supervisor shall ensure the following in areas where services are suspected:

a) Locations of suspected services should be marked out

b) Any mechanical equipment used in the work area should only dig or cut to the formation level of the road/footpath and must be under the supervision of a banksman.

c) Spades and shovels should be used in preference to forks or pickaxes

d) Any potentially identified services should be positively identified and the relevant utilities contacted, if necessary, to ensnre that they are protected. The Site Supervisor shall ensure that all exposed services are adequately supported and protected during excavation, work in the excavation and during backfilling and reinstatement.

NB.
Services may be at other locations than those shown on drawings. They may already be damaged or could be damaged by the action of excavating adjacent to them. This may not have been laid correctly, they may be at shallower depths than those specified by the utilities and there appearance may be deceptive, e.g., gas pipes may look like water mains.

Overhead Services

1 Ensure protective measures are in place to prevent any plant in any mode of operation reaching closer than 6m to overhead cables.

2 Ensure protection in place to cables where access at height is required or ensure that services are disconnected by electricity company prior to work.

3 Display warning signs, where appropriate.

IMPLEMENTATION

Contract Manager, Site Supervisor, All operatives

GUIDANCE INFORMATION

HS(G)47 – Avoiding danger from underground services.
Norweb guidance booklet.
CIRIA Safety handbook Health and Safety in Construction HS(G)150
HSG141 – Electrical safety on construction sites
HSG185 Health and Safety in Excavations Be safe and shore

DOCUMENTATION

Site specific risk assessments and method statements.
Site diary, daily work sheets and on material delivery notes to be filed weekly with the appropriate QA job file.

MONITORING

Site Foreman/Site Supervisor
Contracts Manager
Health and Safety Officer

TRAINING
Operatives have received safety awareness training to CITB standards. On site training given when identified as necessary.

EMERGENCY PROCEDURES
On site emergency procedures are displayed, plus emergency procedures following damage/contact with services.

REVIEW OF EFFECTIVENESS
Health and safety monitoring
Accident/incident investigation
Audits
Tool box talks on a regular basis to refresh understanding of safety precautions necessary when potentially working in the vicinity of live services
Daily by site supervision.

RECOMMENDED CHANGES
None planned

COMMENTS

PERSON MAKING THE ASSESSMENT
Mr Mark Henry, MCIOB

Risk Assessment – Installation of Drains, Manholes and Fittings/Installation of Ducts

RISK FACTOR

Severity of Harm: Low to Medium
Likelihood of Occurrence after application of control measures: Low

PERSONAL PROTECTIVE EQUIPMENT FOR THE ACTIVITY

- High visibility waistcoat/jacket
- Gloves
- Safety footwear
- Hard hat (for work in excavations)

JOB ELEMENTS

Handling and placing of all required drainage and fitting materials in excavation. **Refer also to risk assessments for work on all excavations and breaking into live sewers**. Installation of plastic ducts, use of compressor to blow cord through.

POTENTIAL HAZARDS

Collapse of excavations, materials/plant/people falling into excavations (refer to risk assessment for working on all excavations)
Manual handling injuries, being struck by falling materials or materials being handled mechanically
Cuts/abrasions – use of stihl saw

POTENTIAL HARM

- Death
- Major/minor injuries

NUMBER OF OPERATIVES EXPOSED

All those working in the excavation.

CONTROL MEASURES

1 Refer to risk assessment for work on all excavation to confirm control measures to ensure safety working in and adjacent to excavations.
2 Materials to be moved and handled by plant as far as possible.
3 Pipe bedding to be placed by JCB/dumper or similar. Stop blocks provided where necessary. Signaller provided where necessary. Site Supervisor to co-ordinate work to ensure safe sequence of activities. Dust to be suppressed where necessary by damping down.
4 Plastic drainage pipes handled by hand. Site Supervisor to co-ordinate sequence of lifting, carrying and positioning.
5 Clay pipe to be lifted and positioned by JCB. JCB to have lifting certificate (records maintained by company health and safety management system). Trained slinger to sling each length of pipe lifted. Trained signaller to direct JCB driver as required.
6 Pipe cut as necessary by stihl saw or pipe cutter by trained operative (with abrasive wheels certificate as appropriate) wearing safety goggles. respirator and overalls (no loose clothing). NB. Only occasional cutting would be required along a typical drainage run.
7 Plastic pipes are connected with plastic collars and generally push fitting with a lubricant. Gloves to be worn. COSHH assessment indicates low hazard from lubricant.
8 Use of compressor to blow cord through for duct installation. Compressor fully guarded, pipe connections have whip safety fittings. Operatives are trained in safe use of compressed air hose.
9 Manholes are generally formed from pre-cast units (see risk assessment for concreting in relation to any need to carry out in situ concreting). Units are generally lifted and positioned by JCB (see 5 above). The Site Supervisor shall supervise backfilling around the manhole and ensure absence of significant tripping or falling hazards.
10 Where there is a need to man handle any of the manhole units (including the cover) the Site Supervisor shall assess the weight of the item, the manner in which it could be carried and the route over which it has to be carried and shall train, instruct and supervise selected operatives to ensure that this is carried out safely and without risk to health.

IMPLEMENTATION

Site Supervisor, Operatives

GUIDANCE INFORMATION
Health and Safety in Construction HS(G)150

DOCUMENTATION
Method statements and site specific risk assessments
Site diary, daily work sheets and on material delivery notes to be filed weekly with the job file
Accident/incident investigations

MONITORING
Managing Director, Safety Officer, All Supervisors

EMERGENCY PROCEDURES
General on site emergency procedures are displayed.

REVIEW OF EFFECTIVENESS
Health and safety monitoring
Accident/incident investigation
Audits
Tool box talks on a regular basis to refresh understanding of hazards on site
Daily by site supervision.

RECOMMENDED CHANGES
None planned

COMMENTS

PERSON MAKING THE ASSESSMENT
Mr Mark Henry, MCIOB

Risk Assessment – Manual Handling

RISK FACTOR

Severity of Harm: Low to Medium
Likelihood of Occurrence after application of control measures: Low to Medium

PERSONAL PROTECTIVE EQUIPMENT FOR THE ACTIVITY

- High visibility waistcoat
- Gloves
- Safety footwear

JOB ELEMENTS

Lifting and placing of new materials in site. Removing redundant materials from site, i.e., demolition, strip-out. Loading and unloading of materials from suppliers or own vehicles on/off site.

POTENTIAL HAZARDS

Manual handling of heavy and/or awkward materials, need for repetitive manual handling, lifting from and placing materials at height or at low level, uneven work surfaces and tripping hazards.

POTENTIAL HARM

- Strains and sprains
- Back injuries
- Cuts or abrasions
- Risk of falling/tripping while carrying loads

NUMBER OF OPERATIVES EXPOSED

All

CONTROL MEASURES

NB. **Other generic risk assessments take into account manual handling issues associated with the works that they cover.**

Planning

1 All works will be assessed at the plauning stage and set up to avoid or limit the need to handle heavy or awkward loads as far as possible. The Site Foreman/Supervisor shall decide on suitable loading/unloading locations and distribution areas for materials and on the use of materials handling equipment to limit the need for manual handling, e.g., JCB, forklift, kerb lifters, trolleys, etc. In particular, the need to lift compact loads greater than 30kg, any dimensionally large or awkward loads or repetitive handling of loads of 20kg or more shall be specifically reviewed by the relevant Contracts Manager/Supervisor and safe systems of handling established.

2 Where the work specification allows, the Contracts Manager shall review the specifications for materials and propose alternative materials, where appropriate, to reduce the risk of manual handling injuries.

Training and Existing Medical Conditions

3 All operatives shall receive training in safe manual handling techniques from a trained manual handling trainer.

4 All operatives, on commencement of employment and on identification of any medical/physical conditions, shall inform the Health and Safety Representative of any factor that could affect their ability to carry out manual handling without risk to health. The Health and Safety Representative shall carry out individual risk assessments as necessary and identify any individual control measures or restrictions on tasks.

Supervision on Site

5 The Site Supervisor shall ensure that materials handling and storage is carried out in accordance with the measures planned by the Site Manager/Contract Manager in accordance with item 1 above.

6 Safety footwear shall be worn at all times. Leather or pvc gloves shall be worn when handling materials with sharp or jagged edges, splinters or projections.

7 The Site Supervisor and all operatives shall ensure that the area is free of obstructions and tripping hazards and sufficiently well lit.

IMPLEMENTATION
Site Supervisor, All operatives

GUIDANCE INFORMATION
TUC – Handbook on Health and Safety at Work
HSE – Manual handling book, solutions you can handle
HSG149 – Backs for the Future. Safe Manual Handling in Construction

DOCUMENTATION
Method statements and site specific risk assessments
Site diary, daily work sheets and on material delivery notes to be filed weekly with the job file
Accident/incident investigations

MONITORING
Health and Safety Officer
Site Supervisors

EMERGENCY PROCEDURES
N/A

In general, on site emergency procedures are displayed.

REVIEW OF EFFECTIVENESS
Health and safety monitoring
Accident/incident investigation
Audits
Tool box talks on a regular basis to refresh understanding of safe manual handling methods
Daily by site supervision.

RECOMMENDED CHANGES
None planned

COMMENTS

PERSON MAKING THE ASSESSMENT

Mr Mark Henry, MCIOB

Risk Assessment – Mud or spillage on road

RISK FACTOR

Severity of Harm: Low to High
Likelihood of Occurrence after application of control measures: Low

PERSONAL PROTECTIVE EQUIPMENT FOR THE ACTIVITY

- High visibility jackets/waistcoats
- Safety footwear

JOB ELEMENTS

Trafficking of vehicles on and off site and particularly loading and off site transfer of excavated materials can potentially cause mud or other spillages on roads/footpaths outside of the site limits.

POTENTIAL HAZARDS

Could potentially cause road traffic accident or slips and trips.

POTENTIAL HARM

- Death/major injury
- Minor injuries

NUMBER OF OPERATIVES EXPOSED

All personnel on site
General public and road users

CONTROL MEASURES

1 Site Supervisor to ensure signaller is provided to supervise loading of wagons on site and to monitor all vehicle movement off site.

2 Spillages to be cleaned up as soon as possible to do so safely. Spillages clean up to be supervised by signaller who control any traffic movements in the area and ensure the safety of operatives removing the spillage.

IMPLEMENTATION

Operatives
Site Supervisor

GUIDANCE INFORMATION

Health and Safety in Construction HS(G)150

DOCUMENTATION

Site diary, daily work sheets
Accident/incident investigations
Excavation records

MONITORING

Site Supervisor
Contracts Manager
Health and Safety Officer

EMERGENCY PROCEDURES

General emergency procedures for the site.

REVIEW OF EFFECTIVENESS

Health and safety monitoring
Accident/incident investigation
Audits, Daily by site supervision.
Tool box talks on a regular basis to refresh understanding of hazards mud and spillage on road

RECOMMENDED CHANGES

None planned

COMMENTS

PERSON MAKING THE ASSESSMENT

Mr Mark Henry
MCIOB

Risk Assessment – Setting up signs, cones, barriers and fencing on the live highway

RISK FACTOR

Severity of Harm: Medium to High
Likelihood of Occurrence after application of control measures: Medium

PERSONAL PROTECTIVE EQUIPMENT FOR THE ACTIVITY

- High visibility jackets/waistcoats
- Hard hats
- Safety footwear
- Gloves

JOB ELEMENTS

Setting up signs, cones, barriers and fencing to protect the works prior to commencement of site works – altering these as required during the progress of the works, maintaining them and removal on completion.

POTENTIAL HAZARDS

Being struck by vehicles.
Slips, trips and falls (whilst carrying equipment and/or potential consequences of being hit by traffic)
Trapping hands and fingers in signs, fencing and barriers.

POTENTIAL HARM

- Death or major injury
- Minor injuries

NUMBER OF OPERATIVES EXPOSED

All personnel on site

CONTROL MEASURES

Refer also to risk assessment for working adjacent to road traffic

1 Site Supervisor to determine safe sequence to set up cones, etc. taking into account road junctions, etc.
2 Site Supervisor to ensure that fencing and barriers are carried and handled by a two man team.
3 Where appropriate, Site Supervisor to time setting up avoiding adverse road conditions, e.g., rush hours, poor driving conditions, etc.
4 Operatives to walk in safe areas as far as possible using footpaths, grassed verges, etc. Operatives to ensure that signs are correctly placed, visible to traffic and do not form an obstruction to access points on pedestrian areas.
5 Fencing to be erected in safe sequence with previous panels linked and footed in blocks prior to erection of next section.
6 If signs, cones or barriers need to be weighted, bags of sand or gravel must be used. Blocks or kerbs must not be used as weights.
7 Any difficulties/potential difficulties relating to the set up must be reported to the Site Supervisor.
8 The Site Supervisor shall inspect the set up after it is completed and ensure that it is adequate prior to commencing work on site.

IMPLEMENTATION

All operatives
Site Supervisor

GUIDANCE INFORMATION

HS(G)151 Protecting the Public – Your next move
Health and Safety in Construction HS(G)150
Department of Transport Code of Practice: Safety of Street Works and Road Works

DOCUMENTATION
Site specific risk assessment and method statement
Site diary, daily work sheets
Accident/incident investigations

MONITORING
Site Supervisor
Contracts Manager
Health and Safety Officer

EMERGENCY PROCEDURES
General emergency procedures for the site.

REVIEW OF EFFECTIVENESS
Health and safety monitoring
Accident/incident investigation
Audits
Tool box talks on a regular basis to refresh understanding of hazards of setting up signs, cones, barriers and fencing on the live highway
Daily by site supervision.

RECOMMENDED CHANGES
None planned

COMMENTS

PERSON MAKING THE ASSESSMENT
Mr Mark Henry
MCIOB

Risk Assessment – Surfacing

RISK FACTOR

Severity of Harm: Low to High
Likelihood of Occurrence after application of control measures: Low

PERSONAL PROTECTIVE EQUIPMENT FOR THE ACTIVITY

- High visibility waistcoats/jackets
- Hard hats
- Safety footwear (heat resistant, where necessary)
- Gloves
- Overalls
- Goggles and respirators (where necessary)

JOB ELEMENTS

Potentially to include use of floor saws and stihl saws, planing of existing road surface, operation of paver and rollers, block paving and kerbing.

POTENTIAL HAZARDS

- Being struck by vehicles/plant
- Contact with/being trapped by moving machinery
- Being struck by flying particles
- Bursting/disintegration of grinding wheels
- Fumes, dust
- Burns
- Contact with asphalt/tarmac and emulsion

POTENTIAL HARM

- Death, major injury or minor injury
- Harm to health

NUMBER OF OPERATIVES EXPOSED

All personnel on site
Other users of the highway and pedestrians

CONTROL MEASURES

Refer also to risk assessments for setting up signs, cones, barriers and fencing on the live highway and for working adjacent to road traffic.

1.0 Use of floor saws and stihl saws

1.1 Only operatives who have an abrasive wheels certificate and are assessed by the company as competent are permitted to change abrasive wheels or use the equipment.

1.2 The operative shall select suitable wheels for the work required and ensure guards are in position.

1.3 The operative shall use wheel at optimum speed recommended by the manufacturer. Maximum speeds are displayed on the equipment and on the individual wheel being used

1.4 The operative shall inspect equipment every time new wheel is mounted. All equipment serviced regularly in accordance with the Health and Safety Policy.

1.5 Water shall be applied to suppress dust. The operative shall wear dust masks, gloves, goggles, safety footwear, high visibility jacket and hard hat.

1.6 The Site Supervisor shall ensure adequate exhaust ventilation, if using in a confined space.

1.7 The operative shall obtain assistance to move floor saw.

1.8 The Site Supervisor shall ensure that measures are taken to ensure that the general public are excluded from the area where a saw is being used.

2.0 Operation of heating and planing machines

Note this operation is usually carried out by a sub-contractor approved by the company. The sub-contractor shall provide a risk assessment and method statement to the approval of the Contract Manager addressing:

a) Delivery of machine to site and removal on completion
b) Control of machinery movements on site
c) Training and supervision of all operatives on site
d) Provision of PPE
e) Safe sequence of operations
f) Protection from the cutters
g) Servicing and maintenance of machinery
h) Co-ordination with the company's activities on site.

3.0 Operation of Paver

3.1 Only operated by trained and experienced operatives, authorised by the company.

3.2 If the machine is sprayed before laying operations commence, this should be done before the screed heater is ignited.

3.3 Tools and equipment should be securely stowed, and all platforms free of obstructions, oil and grease, before the machine is put into operation.

3.4 It is essential that the machine operator:

1 ensures that nobody is standing on the deckline, in the hopper, on the side arms or on the top of the screed before putting the machine into motion,
2 never leaves the controls while the machine is in motion,
3 ensures the hopper is clear, except for working material, before engaging the auger/conveyor switches or clutches,
4 at cease work, parks the machine so as to cause no obstruction.

3.5 It is essential that all personnel:

1 stand clear of the screed when it is being raised or lowered,
2 standard clear of the hopper sides when they are being raised or lowered,
3 never touch or lean on the side arms when the machine is working,
4 never enter the hopper when the engine is running,
5 never stand in front of the hopper when a vehicle is reversiug to discharge its load.

3.6 If a rotary dryer is used, the following precautions are necessary:

1 the primary exhaust fan should be kept running at all times when the plant is working.
2 If it is necessary for personnel to enter the drum, e.g., for clearing jammed material, the drum must be stationary and the drive motor isolated and locked out; the drum must be cooled to a tolerable temperature, and the exhaust fan kept running.
3 Platforms and walkways should, at all times, be kept clear of obstructions.

3.7 Use of batch heaters. When on 'automatic control' the several functions of the mixing process are regulated by pre-set elapsed time programmers, and under no circumstances should any attempt be made to repair, adjust or interfere with any part of the machinery, or equipment during the process cycle. The process control must be put into the manual control position. and the isolators opened, before any repair or maintenance work is carried out. Pneumatic or hydraulic control systems must also be made 'dead', and the pressure in the controllers discharged before any repair or maintenance work is carried out.

Any break in the electricity supply while the process is on automatic control will cause the programme to be disorientated and unsafe. Before power is restored, the process should be set on manual control until the operator is satisfied that automatic control can be safely resumed.

The following general precautions must be observed:

1 The fan exhauster must always be running before lighting the burner(s). With any flame failure and/or tripping out (stopping) of the exhauster, the batch heater must be thoroughly purged before attempting to re-light.
2 Personnel should beware of hot gases and/or flame, issuing from the batch heater ports.
3 If LPG is used and the electrode fails to ignite the gas, the batch heater must be purged before attempting to relight.

4 Operators must ensure that no unauthorised persons enter the mixing section of the plant whilst it is in operation.

3.0 Operation of Rollers

3.1 Steel and pneumatic wheeled rollers

Before moving from rest, the driver should always ensure that the way is clear of objects and other persons. Rollers spend 50% of their working cycle reversing and drivers must look to the rear during reversing the machine. When a roller attachment is in use, e.g., scarifer, or asphalt cutter, the driver must not give it his whole attention; he must always ensure that way ahead is clear.

'Coasting' a roller down inclines is dangerous, and must never be permitted.
If it is not possible to park on level ground, the wheels should be chocked. The handbrake should always be applied when the machine is parked.

3.2 Vibrating rollers (towed and pedestrian)

Safety footwear should be worn by all operators.
When working near kerbs and side-walls, operators must beware of impact and collisions.
Where a diversion for pedestrians is necessary, it must be properly signed.
Pedestrian rollers should be fitted with a "dead man's handle".
When unloading/loading from a trailer, the latter must have effective brakes, or be suitably chocked, with legs positioned to prevent tilting.

4.0 Block Paving and Kerbing

4.1 Manual handling to be in accordance with company guidelines, kerb lifters to be used to handle kerbs. Movement of materials to be planned to limit need to manhandle paving.

4.2 Operatives shall wear gloves and safety footwear.

4.3 Operatives should be aware of tripping hazards and avoid the creation of tripping hazards taking particular care where there is the potential for access by the general public.

4.4 Use cement, mortar. etc. in accordance with COSHH data sheets (avoid contact with wet cement/mortar, wear gloves).

IMPLEMENTATION

Contract Manager/Site Supervisor/All operatives

GUIDANCE INFORMATION

HS(G) 151 Protecting the Public – Your next move
HS(G) 144 Safe use of vehicles on Construction Site
CIRIA Site Safety Handbook

DOCUMENTATION

Site specific risk assessment and method statement
Site diary, daily work sheets

MONITORING

Site Supervisor/Contracts Manager/Health and Safety Officer

EMERGENCY PROCEDURES

General emergency procedures for site

REVIEW OF EFFECTIVENESS

Health and safety monitoring
Accident/incident investigation
Audits
Daily by site supervisor

COMMENTS

PERSON MAKING ASSESSMENT
Mark Henry MCIOB

Risk Assessment – Work adjacent to earthmoving and other mobile plant

RISK FACTOR

Severity of Harm: Medium to High
Likelihood of Occurrence after application of control measures: Low to Medium

PERSONAL PROTECTIVE EQUIPMENT FOR THE ACTIVITY

- High visibility waistcoat/jacket
- Safety footwear
- Hard hat
- Hearing protection

JOB ELEMENTS

Working adjacent to earth moving plant may be required as a result of:
Acting as a signaller directing the movement of plant/vehicles
Carrying our other working tasks in the vicinity of the plant
Working adjacent to other contractors operations

POTENTIAL HAZARDS

Being struck by moving plant
Being trapped by a slewing machine
Being hit by falling materials
Deafness

POTENTIAL HARM

- Death or major injury
- Loss of hearing

NUMBER OF OPERATIVES EXPOSED

All those working on the site.

NB. Visitors to site and personnel requiring to cross areas where mobile plant are being used are also potentially exposed to risk.

CONTROL MEASURES

1 Any potential for a member of the public to be struck by mobile plant or by materials being handled by mobile plant must be addressed in a site specific risk assessment.

2 The Site Supervisor shall plan activities on site taking into account the need for plant to move and travel around the site and shall instruct all plant operators, signallers and other operatives working the area on a safe sequence/interaction of work activities.

3 All signallers directing plant movement shall be trained both in signalling and in the measures necessary to ensure their own safety.

4 High visibility waistcoats/jackets shall be worn at all times. The Site Supervisor shall consider any other factors that could lead to personnel not being visible to machine drivers, e.g., weather, excavations, stockpiles of materials, etc. and take measures to improve visibility.

5 All operatives shall ensure that the site is kept free from tripping hazards, as far as possible and safety footwear shall be worn at all times.

6 No person shall pass to the rear of a slewing machine if the safe gap between the machine and any fixed object is at its narrowest point less than 600 mm.

7 The serviceability and safety of all plant owned by the company is maintained in accordance with the company health and safety policy. The safety of plant hired in shall be confirmed by the hire company. The company maintains records of training and competence of employees, only specifically authorised employees are allowed to operate items of plant and vehicles.

8 Plant operators and signallers shall wear hearing protection where required in accordance with the company's guidelines on noise levels.

IMPLEMENTATION

Site Supervisor, All Operatives

GUIDANCE INFORMATION
Health and Safety in Construction HS(G)150

DOCUMENTATION
Method statements and site specific risk assessments
Site diary and daily work sheets
Accident/incident investigations

MONITORING
Managing Director
Safety Officer
All Supervisors

EMERGENCY PROCEDURES
General on site emergency procedures are displayed.

REVIEW OF EFFECTIVENESS
Health and safety monitoring
Accident/incident investigation
Audits
Tool box talks on a regular basis to refresh understanding hazards associated with mobile plant
Daily by site supervision.

RECOMMENDED CHANGES
None planned

COMMENTS

PERSON MAKING THE ASSESSMENT
Mr Mark Henry
MCIOB

Risk Assessment – Work adjacent to road traffic

RISK FACTOR

Severity of Harm: Medium to High
Likelihood of Occurrence after application of control measures: Low to Medium

PERSONAL PROTECTIVE EQUIPMENT FOR THE ACTIVITY

- High visibility jackets
- Hard hats
- Gloves
- Safety footwear
- Ear defenders (where required)

JOB ELEMENTS

Working within or adjacent to any road or other trafficked area.

POTENTIAL HAZARDS

Being struck by moving traffic (road traffic or vehicles manoeuvring on or off the site.

POTENTIAL HARM

- Death or major injury

NUMBER OF OPERATIVES EXPOSED

All personnel on site.

CONTROL MEASURES

1 Contract Manager to determine whether the work is covered by the New Roads and Streetworks Act or Highways Act. Contracts Manager/Site supervisor to identify any need for traffic management and extent of lighting, barriers and signage required to protect the works, road users and pedestrians.

2 All work areas will be protected by an agreed extent of fencings or barriers. The Site Supervisor shall ensure that they are erected and maintained during the duration of the works. The Site Supervisor shall ensure that the site is adequately lit at night and that all warning signs are displayed throughout the work shifts and on completion of work shift.

3 Operatives will wear reflective jackets or waistcoats at all times. Operatives will wear hard hats if this increases their visibility.

4 A nominated signaller will supervise any vehicle movements on or off the site and onto the highway. Where possible the need to reverse onto the highway will be avoided.

5 Visitors will be supervised at all times. All operatives will be made aware of the dangers of working adjacent to road traffic.

IMPLEMENTATION

Contracts Manager
Site Supervisor

GUIDANCE INFORMATION

Department of Transport Code of Practice: Safety of Street Works and Road Works
Health and Safety in Construction HS(G)150

DOCUMENTATION

Site specific risk assessment and method statement. Written instruction on extent of traffic management, signage, etc.
Site diary, daily work sheets
Accident/incident investigations

MONITORING

Site Supervisor
Contracts Manager
Health and Safety Officer

EMERGENCY PROCEDURES
General emergency procedures for the site.

REVIEW OF EFFECTIVENESS
Health and safety monitoring
Accident/incident investigation
Audits
Tool box talks on a regular basis to refresh understanding of hazards of working adjacent to road traffic
Daily by site supervision.

RECOMMENDED CHANGES
None planned

COMMENTS

PERSON MAKING THE ASSESSMENT
Mr Mark Henry
MCIOB

