this drawing is copyright Mewes & Davis. ©

Contractors must check all dimensions on site. Only figured dimensions are to be worked from. Discrepancies must be reported immediately to the Architect before proceeding.

In the event of conflict between this drawing and subcontractor's working drawings for relevant building components then the sub-contractors drawing shall take precedence.

This drawing to be read in conjunction with all current related Tesco design standards. The contractor shall source all design standards direct from tesco property website and ensure that the requirements are coordinated and incorporated in the works, whether or not expressly included in the scope of this drawing.

dwg file :

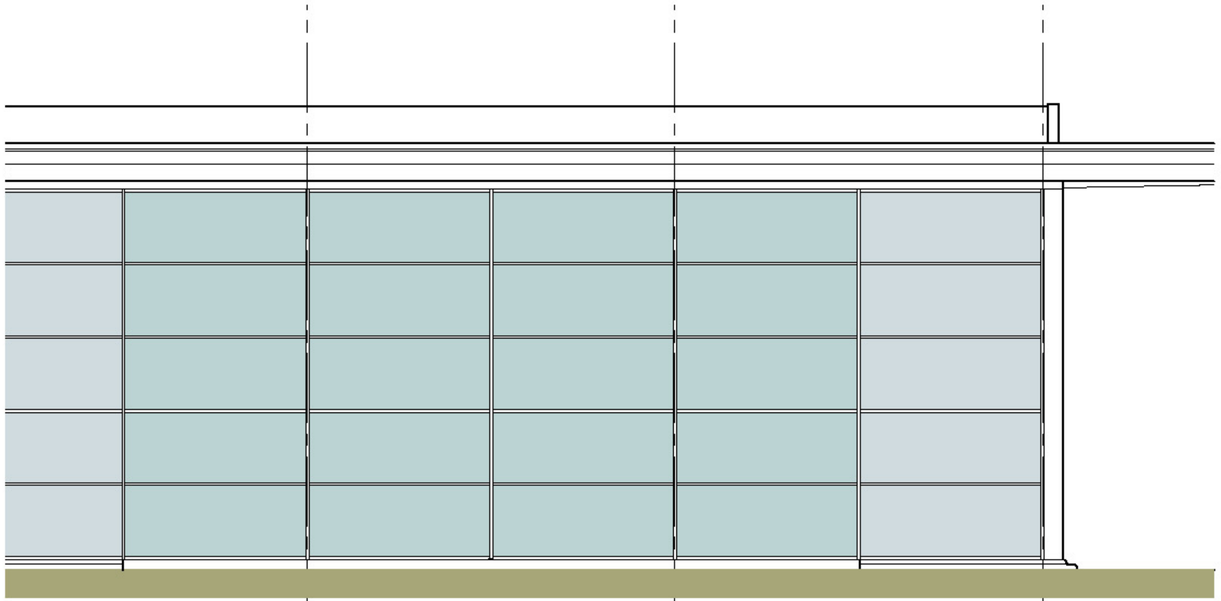

FRONT ELEVATION

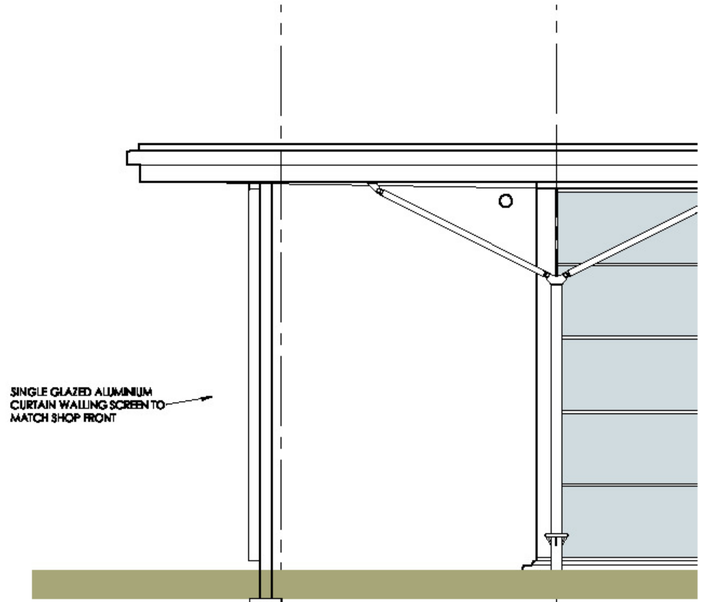

SIDE ELEVATION

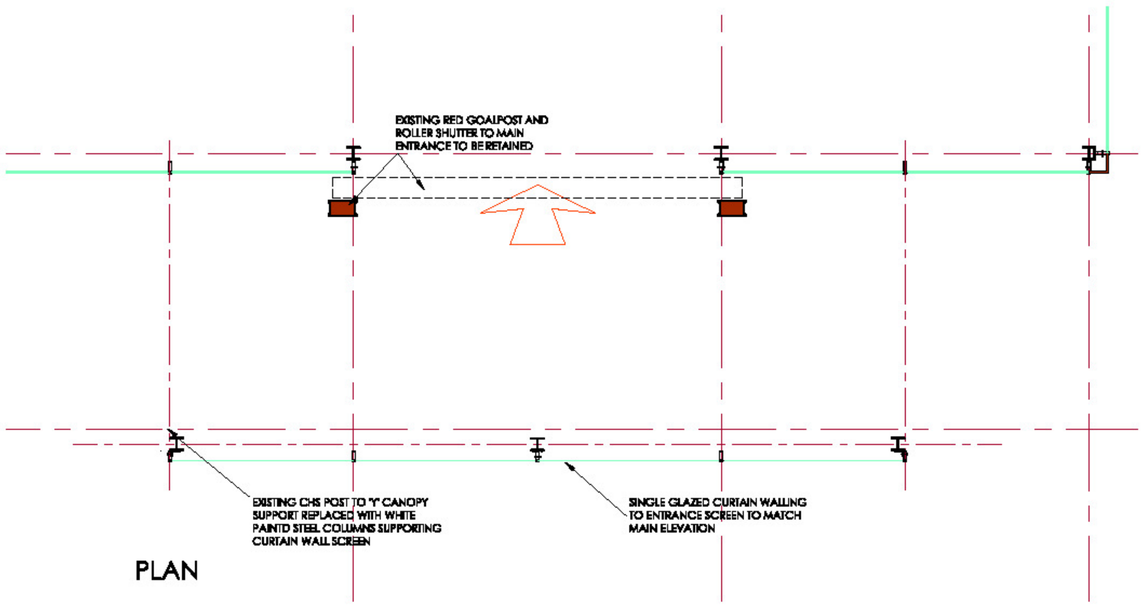

PLAN

FINAL DIMENSIONS SUBJECT TO
DOOR MANUFACTURERS DETAILS

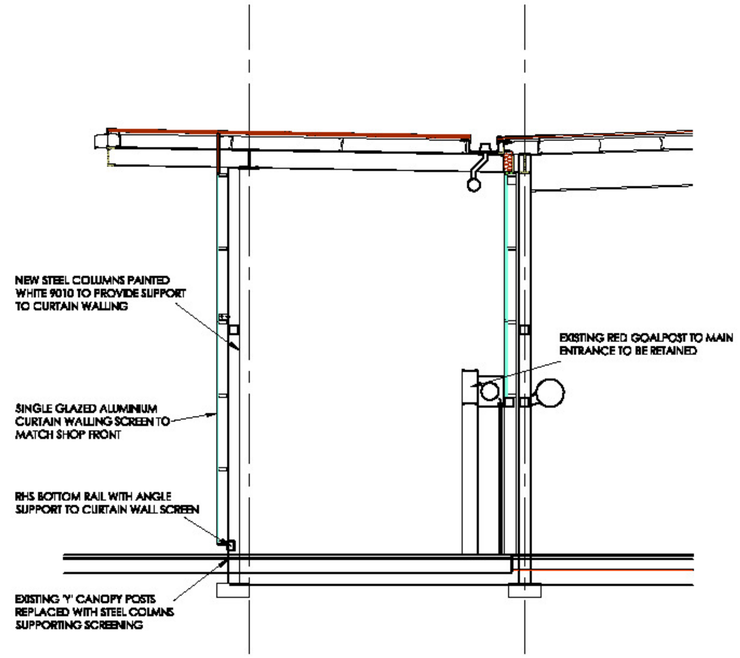

SECTION

TESCO

MEWES & DAVIS
ARCHITECTS
Derriford Business Park, Derriford, Plymouth PL6 5QZ. Tel +44 (0) 1752 758800
Fax +44 (0) 1752 758828 email mda@mewes-davis.com

project title
TESCO STORES
ENTRANCE LOBBIES

drawing title
ENTRANCE LOBBY
D

scale
A1 - 1:50 A3 - 1:100

date	drawn by	checked
0706	MPC	

drawing number
1535 . 04

this drawing is copyright Mewes & Davis. ©

Contractors must check all dimensions on site. Only figured dimensions are to be worked from. Discrepancies must be reported immediately to the Architect before proceeding.

In the event of conflict between this drawing and subcontractor's working drawings for relevant building components then the sub-contractors drawing shall take precedence.

This drawing to be read in conjunction with all current related Tesco design standards. The contractor shall source all design standards direct from tesco property website and ensure that the requirements are coordinated and incorporated in the works, whether or not expressly included in the scope of this drawing.

dwg file :

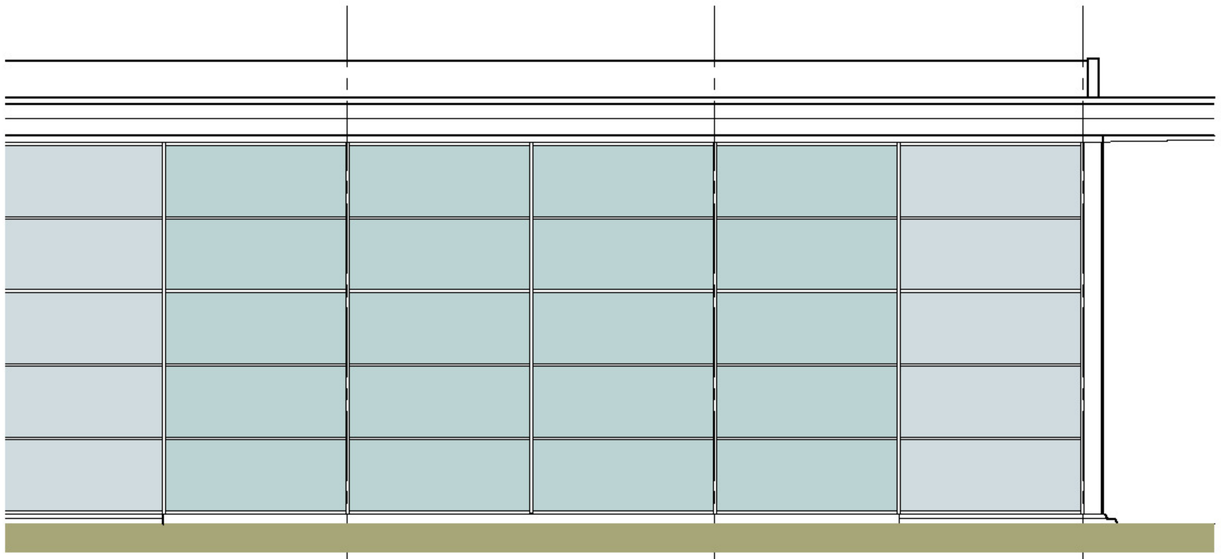

FRONT ELEVATION

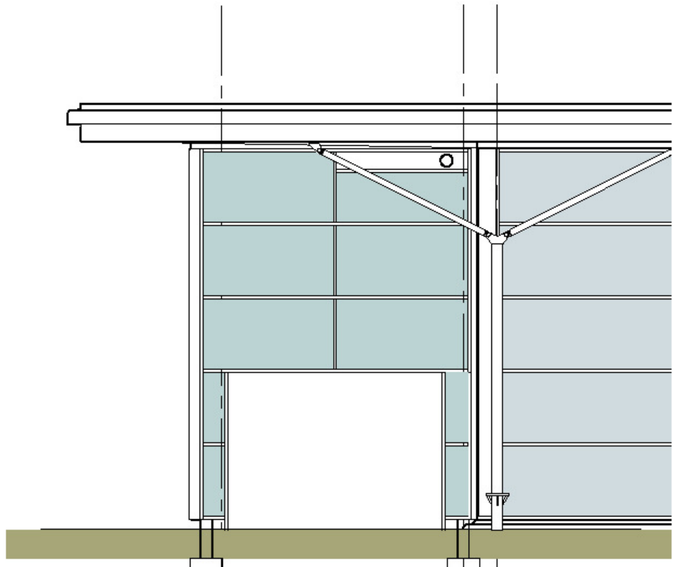

SIDE ELEVATION

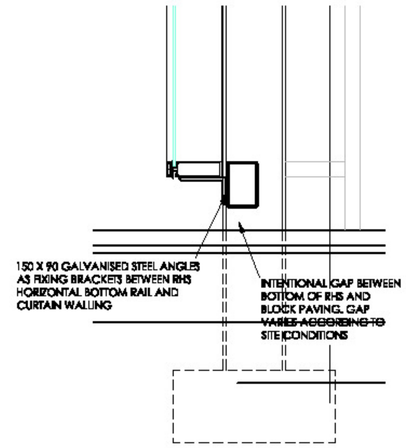

DETAIL 3
1 : 10

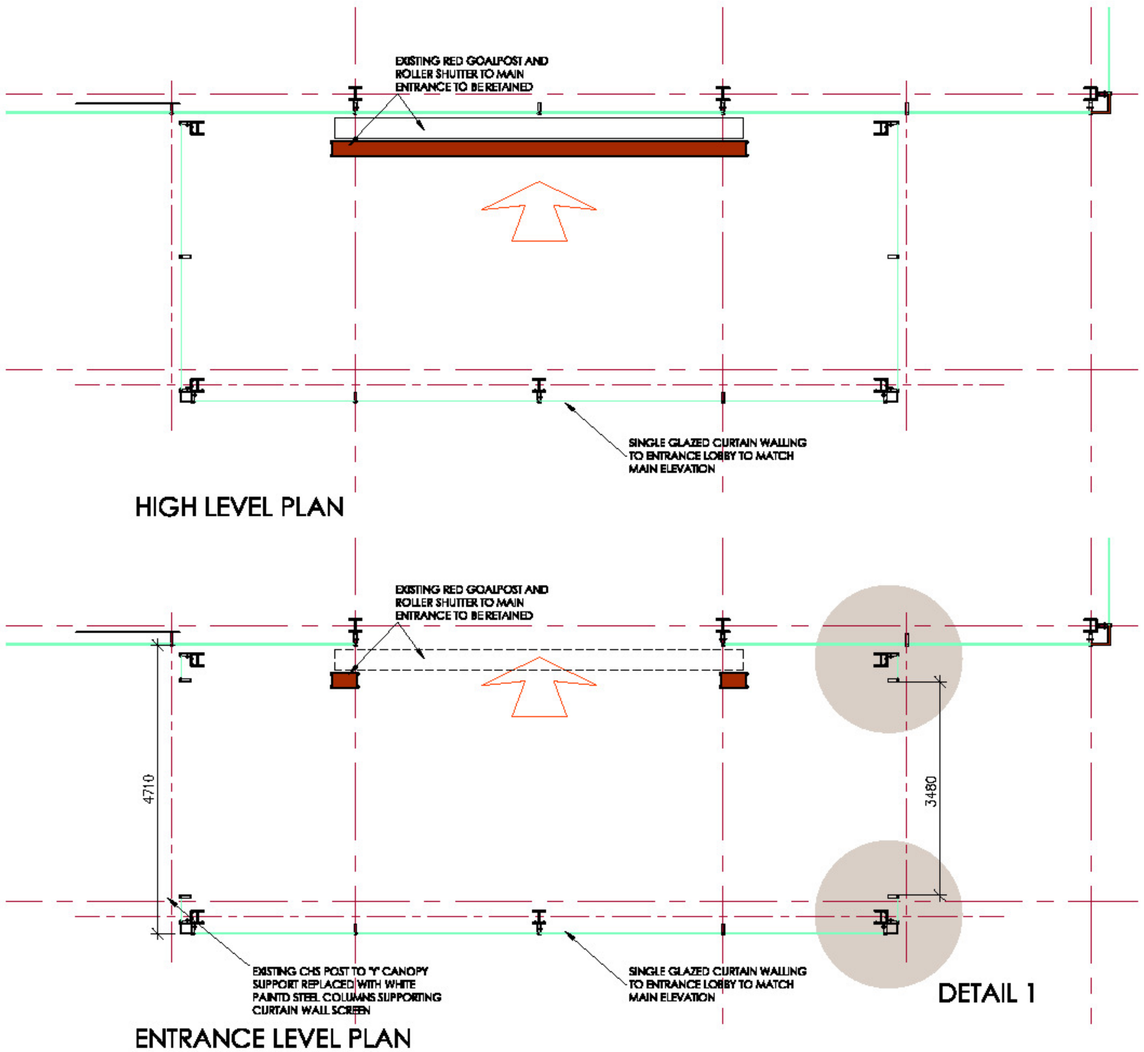

HIGH LEVEL PLAN

ENTRANCE LEVEL PLAN

DETAIL 1

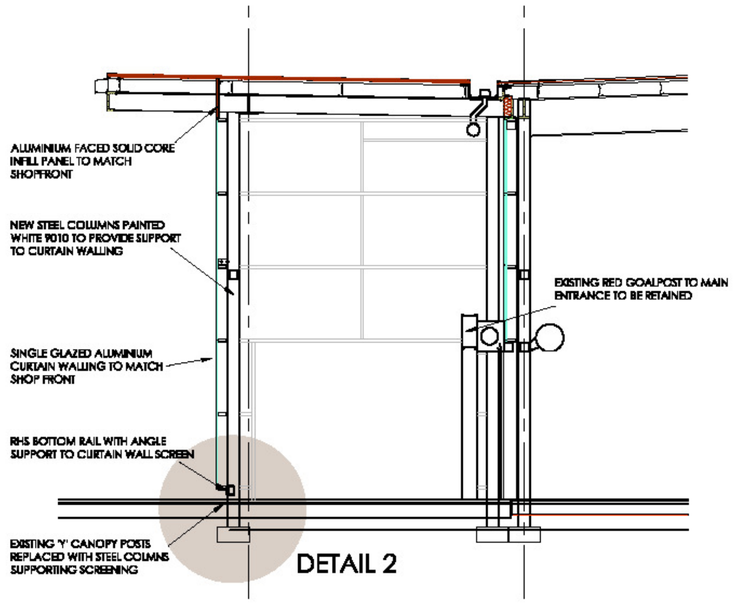

DETAIL 2

SECTION

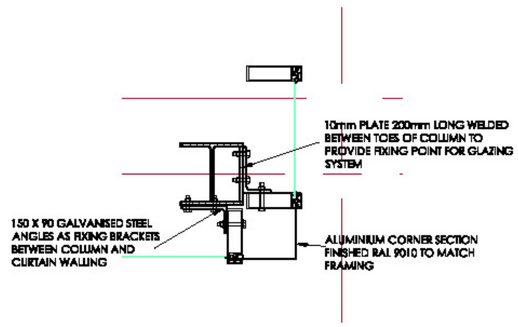

DETAIL 1
1 : 10

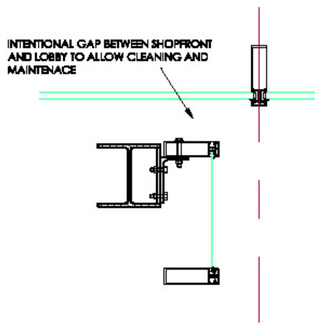

DETAIL 2
1 : 10

A 12.07.06 MPC DETAILS 1,2 & 3 ADDED

TESCO

MEWES & DAVIS
ARCHITECTS
Derriford Business Park, Derriford, Plymouth PL6 5QZ. Tel +44 (0) 1752 758800
Fax +44 (0) 1752 758828 email mda@mewes-davis.com

project title
TESCO STORES
ENTRANCE LOBBIES

drawing title
ENTRANCE LOBBY
E

scale
A1 - 1: 50 A3 - 1 : 100

date	drawn by	checked
0706	MPC	

drawing number
1535 . 05 A