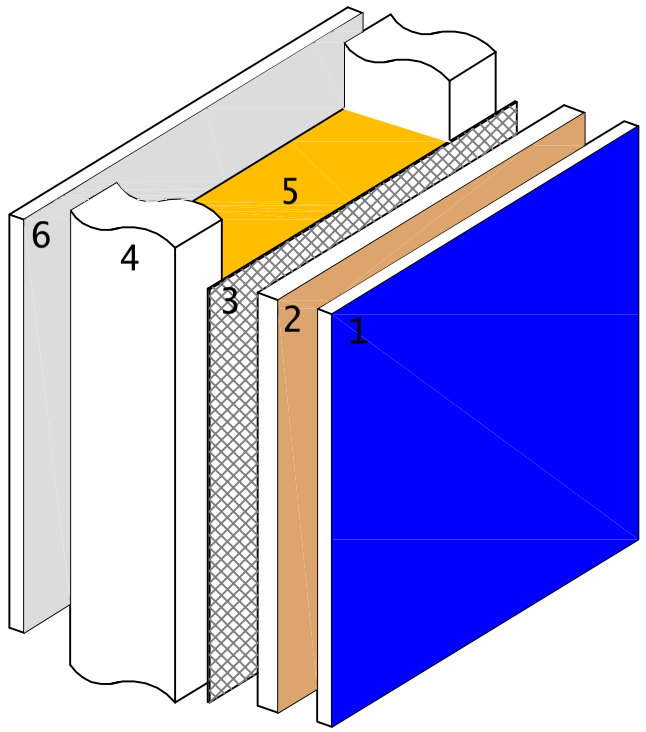

1/ LAMINATE PANEL (COLOUR CHOICE)

2/ 18mm MDF (SCREWED TO STUDWORK)

3/ EXPERMET (REF: 2074F)

4/ 100 x 50 STUDWORK (@ 400 ctrs)

5/ FIBRE GLASS CAVITY INSULATION BATTS

6/ 12.5 PLASTER BRD. (PAINTED TO MATCH DECOR)

NOTIONAL 'U' VALUE FOR TYPICAL LAMINATE PANEL CONSTRUCTION

	R VALUE
BONDED LAMINATE (EXT)	0.000
MDF (9mm)	0.140
BONDED LAMINATE (INT)	0.000
GLASS MINERAL WOOL SLAB	2.780
47 x 100 SAWN SOFTWOOD CARCASSING	0.020
EXPAMET 2074F MESH	0.000
MDF (18mm)	0.140
GYPROC WALLBOARD (12.5mm)	0.050
RSI CONSTANT	0.123
RSO CONSTANT	0.055
TOTAL	3.308

U = 1/3.308 0.302 W/m2 K

BUILDING REGULATION PURPOSES

GENERAL NOTES

FINISH :- POWDER COATED

SITE NOTES

REVISION	DESCRIPTION	DATE	E
02	EXPAMET REF WAS 1282F	29/09/09	B
01	U VALUE ADDED	29/05/07	B

CLIENT

SITE ADDRESS

TITLE

EXTERNAL SECURITY WALL CONSTRUCTION

DRAWN	DATE	SCALE
BM	28/11/06	N.T.S
REF/DRG NO.	SHEET	REVISION
CTS0207	A	02

Complete Technical Services Ltd.