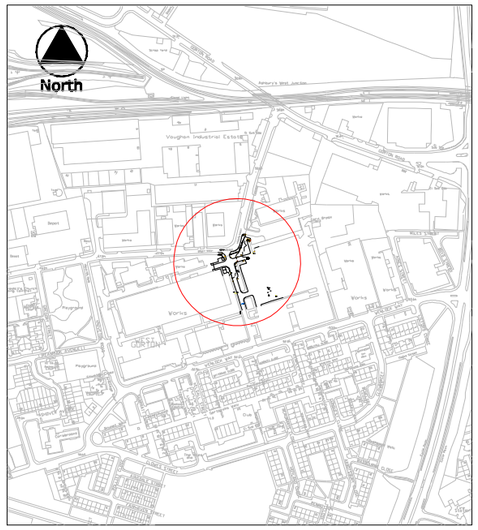

LOCATION PLAN Scale 1:2500

BRITISH STANDARD 5837:2005
TREES IN RELATION TO CONSTRUCTION
RECOMMENDATIONS
Refer to Arboricultural report

- CATEGORY A Retention most desirable
- CATEGORY B Retention desirable
- CATEGORY C Tree which could be retained
- CATEGORY R Tree for removal
- TEMPORARY TREE PROTECTION FENCING TO BS5837
- TREES RETAINED
- TREES AND SHRUBS TO BE REMOVED

T1 TREE REFERENCE
CENTRE OF TREE/SHRUB
TREE TO BE REMOVED
ROOT PROTECTION AREA

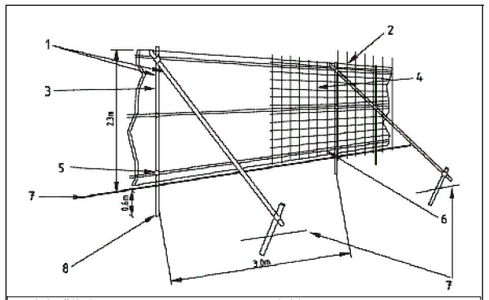

1 Standard scaffold poles
2 Uprights to be driven into the ground
3 Panels secured to uprights with wire ties and where necessary standard scaffold clamps
4 Weldmesh or 2.4m high boarding to be wired to the uprights and horizontals
5 Standard clamps
6 Wire to be twisted and secured on inside of face of fencing to avoid easy dismantling
7 Ground level
8 Approx 0.6m driven into ground or set in concrete foot

Protective barrier – Taken from BS5837

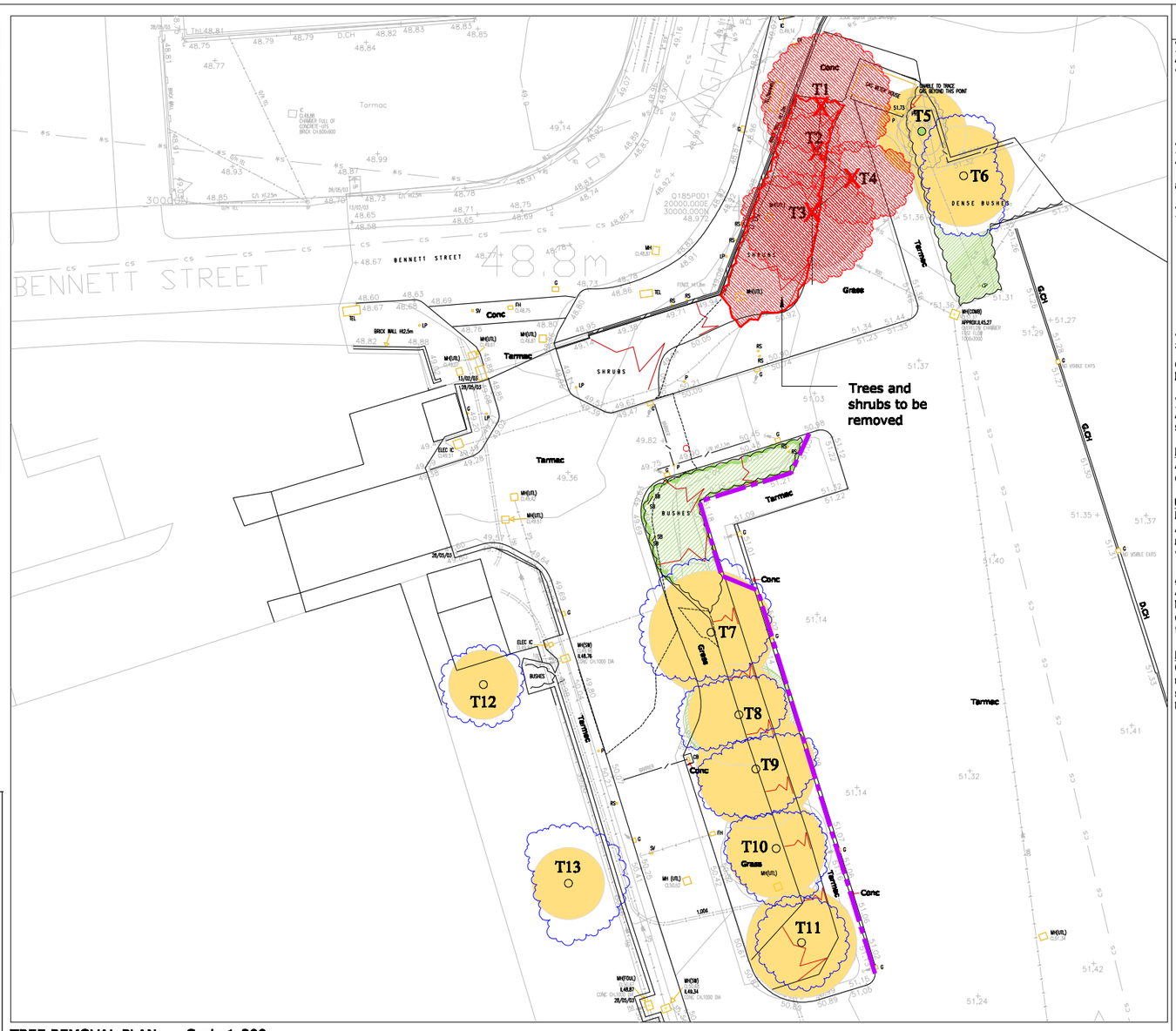

TREE REMOVAL PLAN Scale 1:200

TREE REMOVAL SCHEDULE

TREE SPECIES	COMMON NAME	TREE REF	CATEGORY	RETAIN	PRUNE	REMOVE
Platanus x hispanica	London Plane	T1	B			Yes
Platanus x hispanica	London Plane	T2	B			Yes
Platanus x hispanica	London Plane	T3	B			Yes
Platanus x hispanica	London Plane	T4	B			Yes

Notes

Tree Removal
All works are to be carried out by a competent Arborist and must comply with
- BS5837:2005 Trees in Relation to Construction
- BS3998:1989 Recommendations for Tree Work
- NJUG Vol. 4
- AFAG Best practice guidelines for arboricultural works

Tree survey
A tree survey has been carried out in accordance with BS5837:2005 by JCA Ltd., dwg number 10387, a copy of which accompanies the planning application

Temporary tree protection fence
- Temporary tree protection fencing to BS5837:2005 Heras type, is to be installed along line shown to prevent encroachment of traffic, materials or change in level within the RPA. The fence must be fixed in the ground for the duration of the construction works.
- During construction activities there must be no storage of plant, materials or soils within the Root Protection Area at any time. Trafficking within the protected area below the canopy of existing trees is not permitted.

The Root Protection Area
The Root Protection Area relates to the extent of the tree root system and is calculated in relation to the tree height and girth and may therefore extend beyond the edge of the tree canopy.

Timing
All works must be implemented outside the bird nesting and breeding season.

Ecology
All trees and vegetation in the vicinity must be surveyed by a qualified ecologist and be re-checked prior to commencement of tree works.

Unauthorised tree works
No works other than those discussed with and approved by the Arboricultural Officer may be carried out. Any additional works to trees must be agreed in advance with the Arboricultural Officer and confirmed in writing.

Arisings
Any root prunings from the tree works are to be removed off site. Landowner approval must be sought to confirm whether arisings may be chipped, stacked on site as habitat piles, or whether they are to be removed from site.

Reinstatement
On completion of the construction works ground levels should remain unaltered within the root protection area. A landscape reinstatement scheme will be implemented as detailed on dwg UU/ES/L/80021989/5082/2685

REVISION INFORMATION

DATE	REV	

DATE	DRAWN	CHCKD	REV	PURPOSE
7.11.11	MB	MD		Planning Application

United Utilities

PROJECT	ICI WORKS WENLOCK LANE CHORLTON BROOK UIDs MAN0376
TITLE	Bennett St. /Vaughan St. Tree removal and tree protection plan PLANNING APPLICATION DRAWING

DRAWING NUMBER	SCALE	MASTER SIZE
UU/ES/TP/80021989/5082/2686	As shown	A1