elevations 1:20@A4

window enlargement

1 Rectory Road Cheetham Hill Manchester M8 5EA

12035

02.

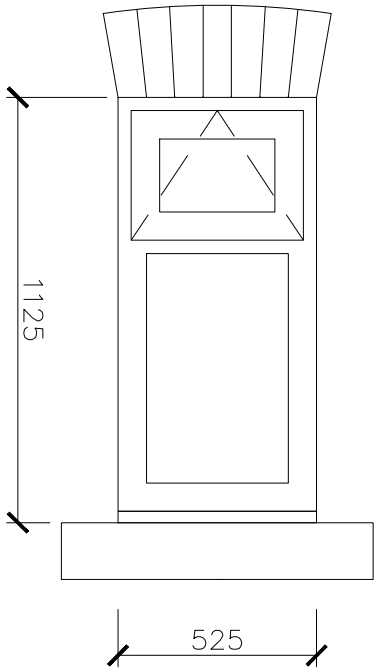

Existing Window Elevation

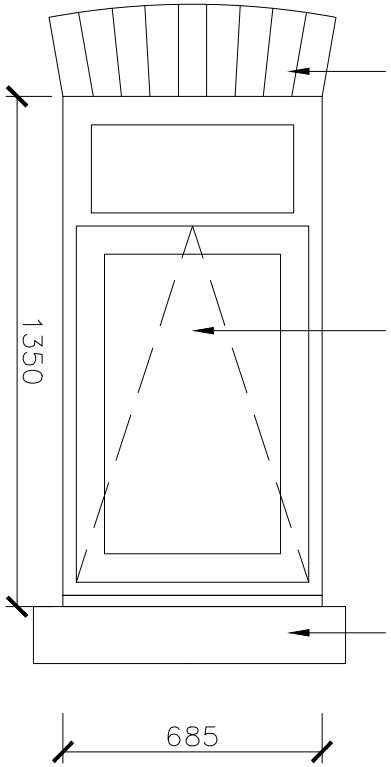

Proposed Window Elevation

Window height increased and arched brickwork soldier course to be reconstructed at higher level.

Habitable openable windows with a minimum of 0.33m² opening area, providing unobstructed opening of 850 x 500mm wide (min 800mm & max 1100mm above floor) to complying with emergency egress within building regulations as an alternative means of escape.

Existing sill to remain

0m 20 40 60 80 100 120m

P4B Architecture

t 0800 731 4707
e info@p4b-architecture.co.uk
w www.p4b-architecture.co.uk
a 79 Broadway Worsley Manchester M28 7FA

All rights reserved. © Crown copyright 2011. These plans & specifications are the property of P4B Architecture Ltd, and shall not be re-printed, reproduced, modified in whole or part without written consent, nor shall any building or structure be constructed in accordance with such plans or specifications thereof without written consent.