DO NOT SCALE – IF IN DOUBT ASK

REVISION			
MOD No.	MODIFICATION	DATE	INITIAL
-	-	-	-

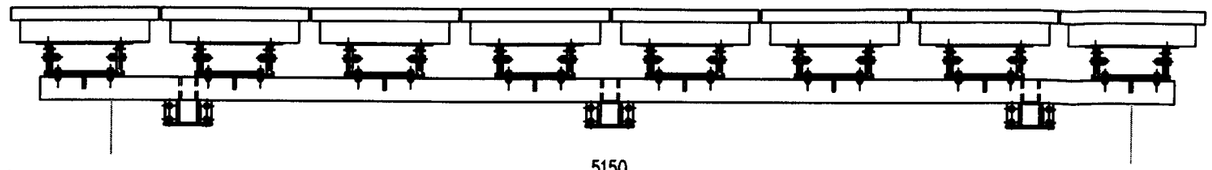

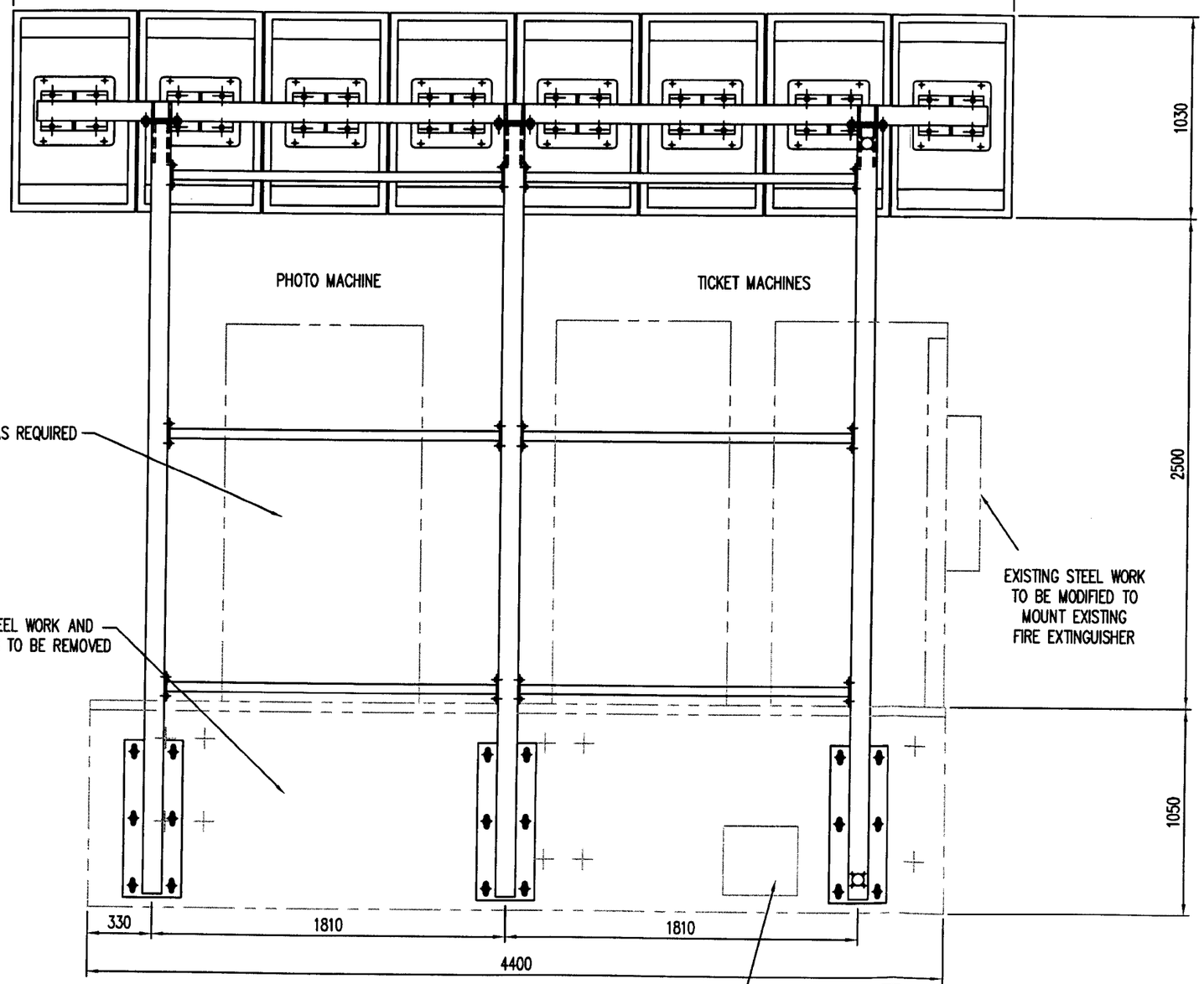

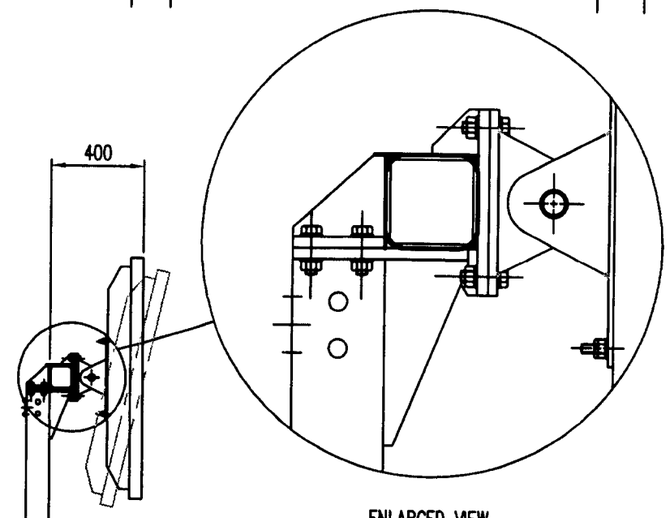

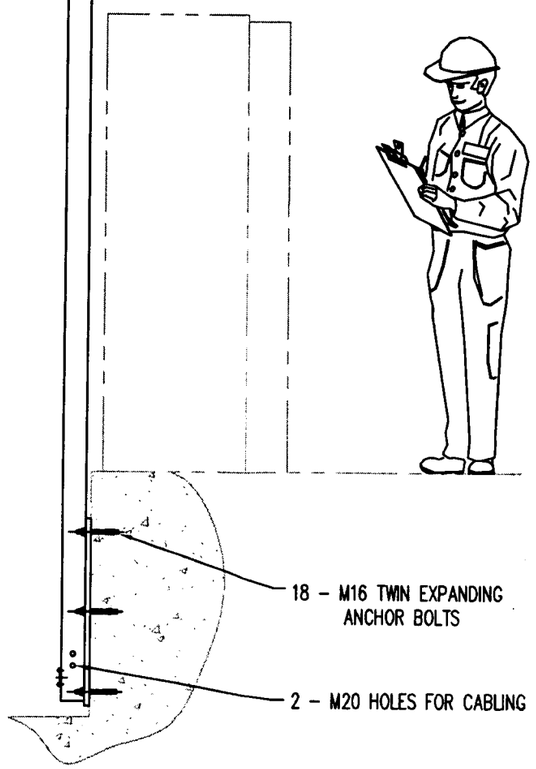

BOLT TENSIONING TORQUES (Nm) UNLESS OTHERWISE STATED			
SIZE	GRADE 4.8	GRADE 8.8	GRADE 10.9
M8	21	35	35
M10	41	69	69
M12	70	84	120
M16	170	280	300
M20	330	400	600

INFOTEC Ltd

Description :-	GOAL POST STRUCTURE 8 DISPLAY MANCHESTER VICTORIA
Drawing No :-	16229A–0
Job No :-	D_37
Drawn By :-	KH
Checked By :-	XXX
Date :-	18/03/08
Date :-	00/00/00
Scale	1:35
Sheet	1 of 1

This print is the property of INFOTEC LTD. It is confidential and returnable on demand. It is not transferable and may not be copied without express permission.