RECD 20

Signage example with modifications and fixings

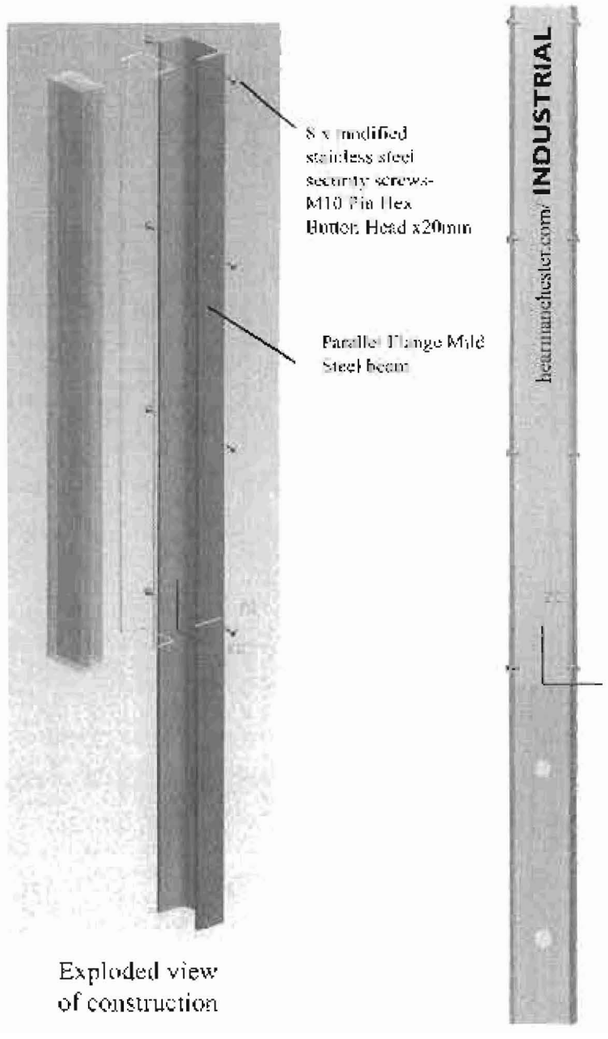

Exploded view
of construction

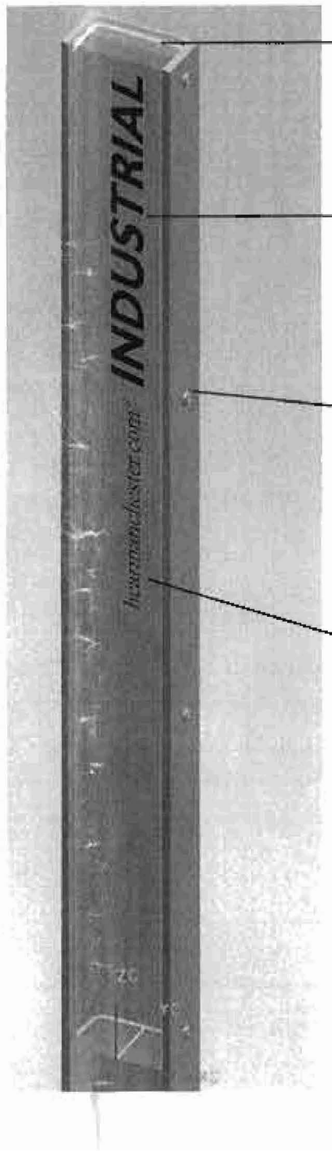

Bead of semi translucent silicon tubing
for seal all round set in groove so
cannot pick out but can be replaced if necessary.
Also takes up slack due to beam tolerances
and expansion and contraction of materials

Capital "Theme"lettering -individual
letters cut and sealed between front back
pieces of acrylic

Stainless steel security screws -
end sticking into acrylic turned smooth
with brushed finish. Thread screws into
girder only so acrylic can
expand and contract without restriction

Web address engraved on front face
of acrylic and painted in black

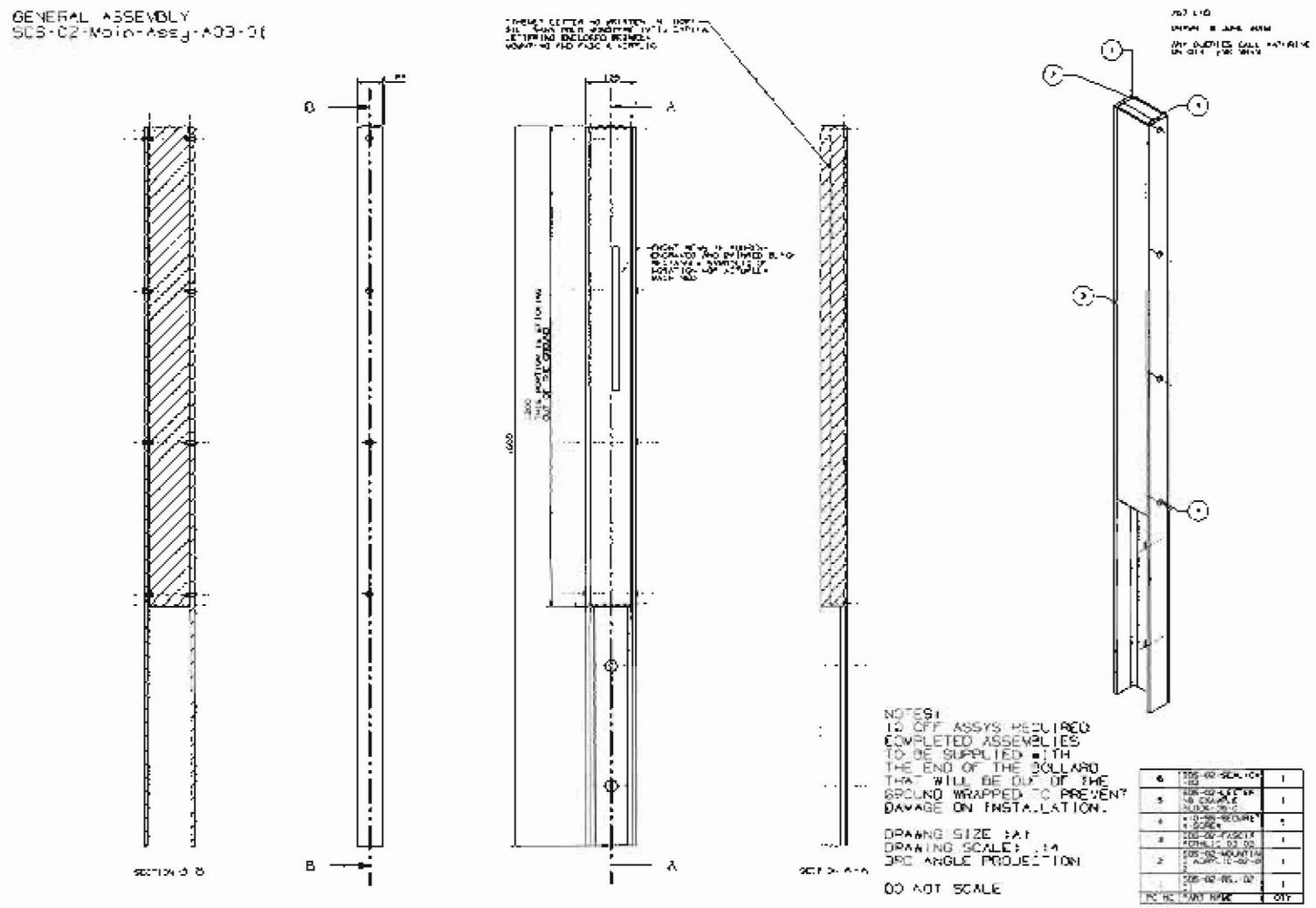
GENERAL ASSEMBLY
SCS-02-Main-Assy-A03-01
B
A
NOTES:
10 OFF ASSYS REQUIRED
COMPLETED ASSEMBLIES
TO BE SUPPLIED WITH
THE END OF THE BOLLARD
THAT WILL BE OUT OF THE
GROUND WRAPPED TO PREVENT
DAMAGE ON INSTALLATION.
DRAWING SIZE :A1
DRAWING SCALE: 1:4
3RD ANGLE PROJECTION
DO NOT SCALE
QTY

hearmanchester.com/

INDUSTRIAL
PROUD
HUMAN
RADICAL
POETIC
UNSUNG
UNDERGROUND
EN-ROUTE
GREEN
INSPIRED

