A1: DO NOT SCALE 0mm 20 40 60 80 100

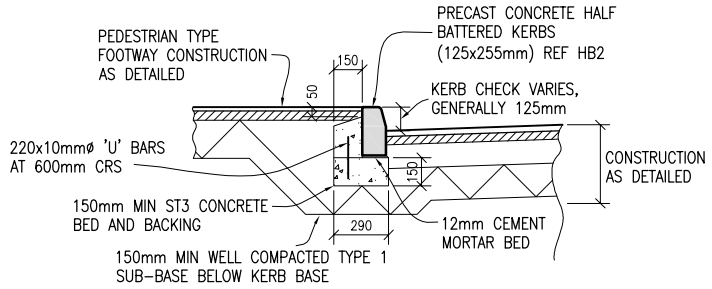

PROPOSED KERB DETAIL
Scale 1:20

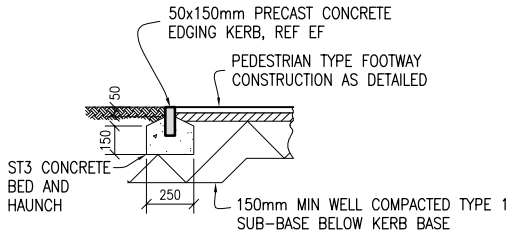

PROPOSED FOOTWAY EDGING DETAIL
Scale 1:20

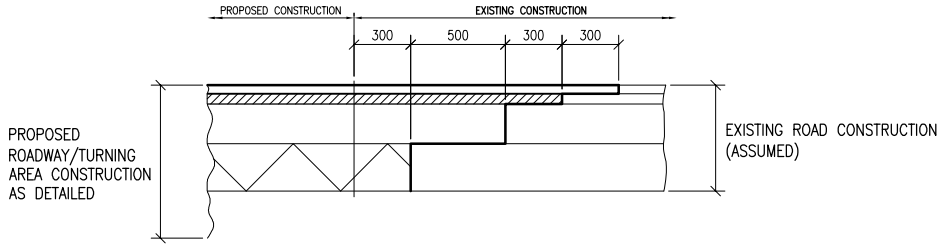

PROPOSED ROAD SURFACE TIE-IN DETAIL
Scale 1:20

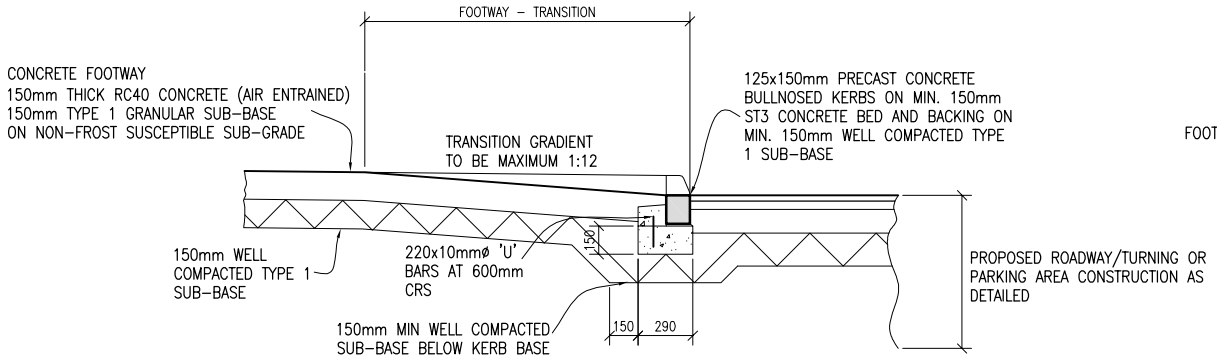

PROPOSED DROP KERB CROSSING DETAIL
CONCRETE FOOTWAY
Scale 1:20

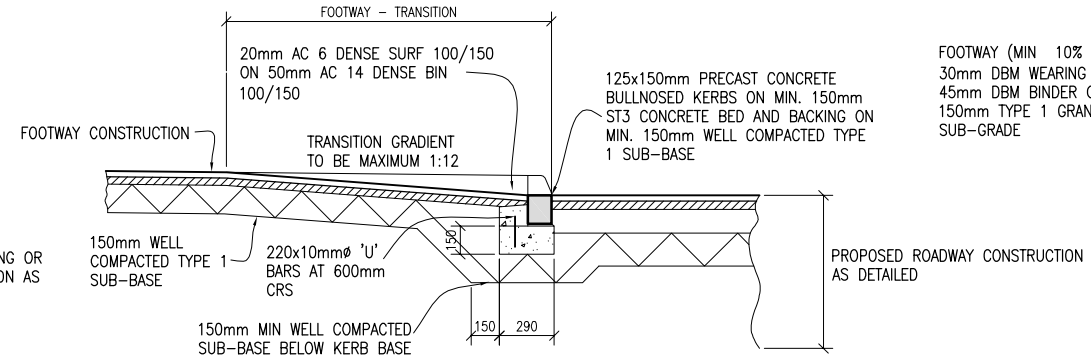

PROPOSED DROP KERB CROSSING DETAIL
TARMAC FOOTWAY
Scale 1:20

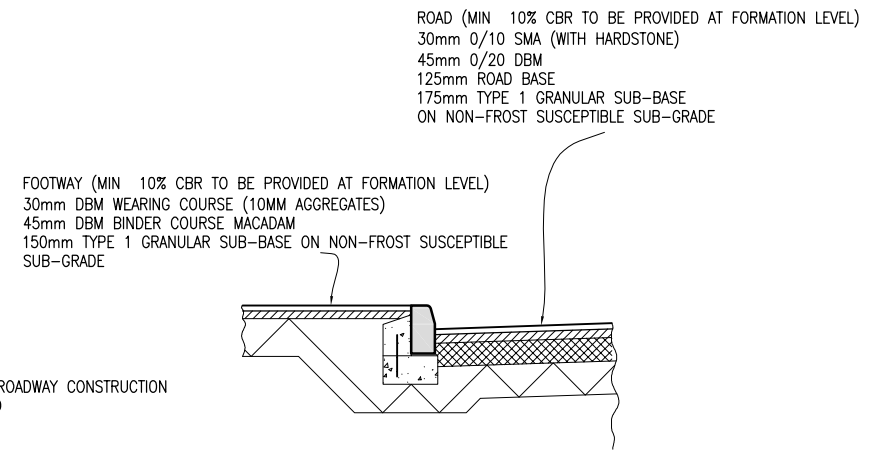

PROPOSED ROAD & FOOTWAY CONSTRUCTION
Scale 1:20

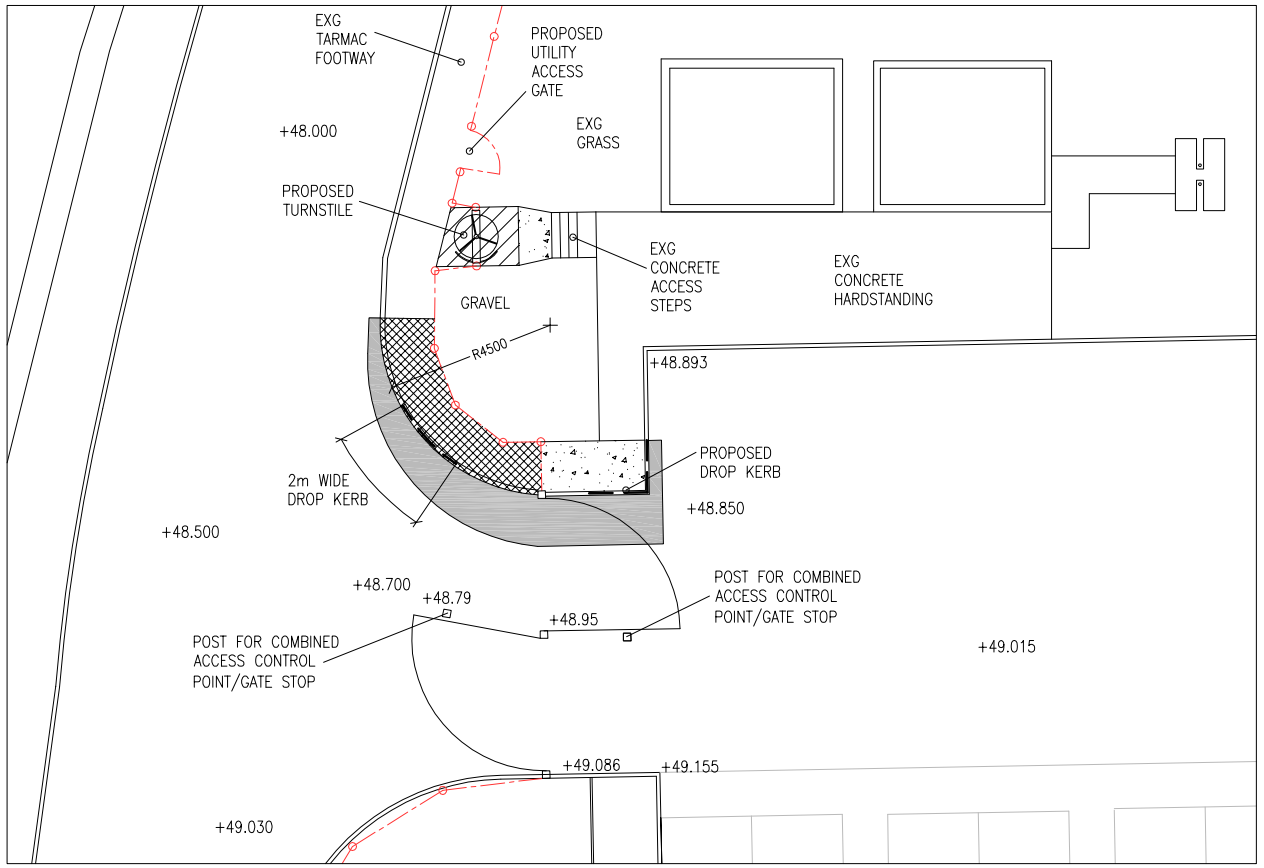

PLAN ON PROPOSED ENTRANCE
Scale 1:100

LEGEND

ROAD (MIN 10% CBR TO BE PROVIDED AT FORMATION LEVEL)
30mm 0/10 SMA (WITH HARDSTONE)
45mm 0/20 DBM
125mm ROAD BASE
175mm TYPE 1 GRANULAR SUB-BASE
ON NON-FROST SUSCEPTIBLE SUB-GRADE

FOOTWAY (MIN 10% CBR TO BE PROVIDED AT FORMATION LEVEL)
30mm DBM WEARING COURSE (10MM AGGREGATES)
45mm DBM BINDER COURSE MACADAM
150mm TYPE 1 GRANULAR SUB-BASE ON NON-FROST SUSCEPTIBLE SUB-GRADE

CONCRETE FOOTWAY
150mm THICK RC40 CONCRETE (AIR ENTRAINED)
150mm TYPE 1 GRANULAR SUB-BASE
ON NON-FROST SUSCEPTIBLE SUB-GRADE

TURNSTILE BASE
300mm THICK RC40 CONCRETE (AIR ENTRAINED) REINFORCED WITH 1No LAYER A393 MESH T&B (40mm MIN COVER)
175mm TYPE 1 GRANULAR SUB-BASE
ON NON-FROST SUSCEPTIBLE SUB-GRADE

DROP KERB

Rev		By	Checked	Approved	Date
00	PLANNING SUBMISSION	Marc DL-J	R Caley		29.8.09
Rev	Revision Note	By	Checked	Approved	Date

Client: SIEMENS

Project: SIEMENS TRANSPORTATION UK
ARDWICK TRAINCARE FACILITY

Status: APPROVAL

Scale: AS SHOWN @ A1

SPENCER great engineering solutions!

GATE 1 MODIFICATIONS
HIGHWAY CONSTRUCTION
PLAN & DETAILS

Dwg No C1620 – 100 – 003 Rev 00

"Copyright of C Spencer Limited 2012. All rights reserved. Reproduction or use, other than with the written permission of C Spencer Limited is prohibited."