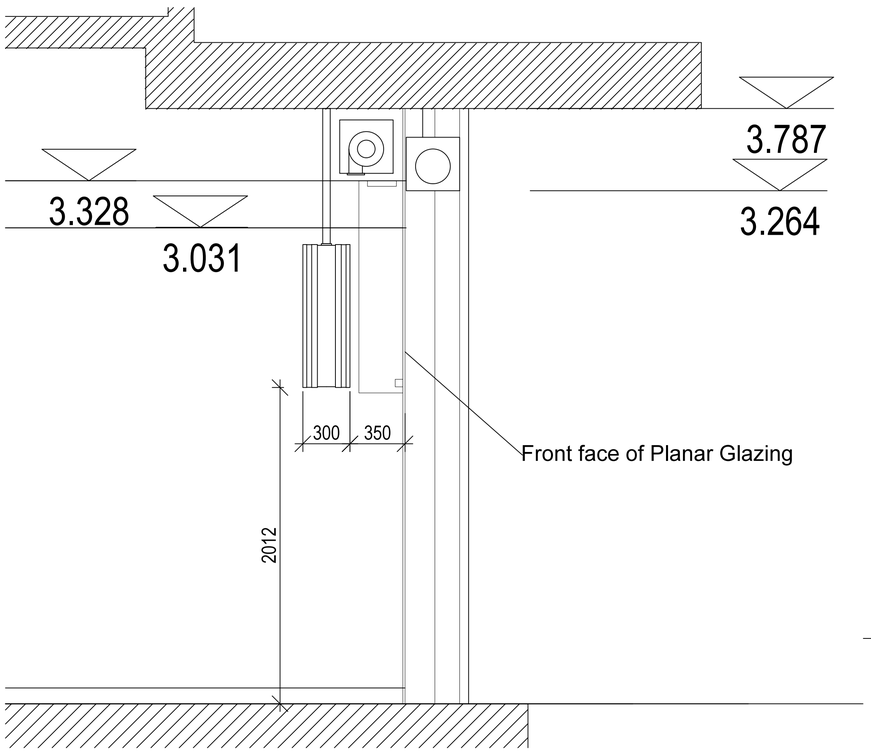

Section 1/20

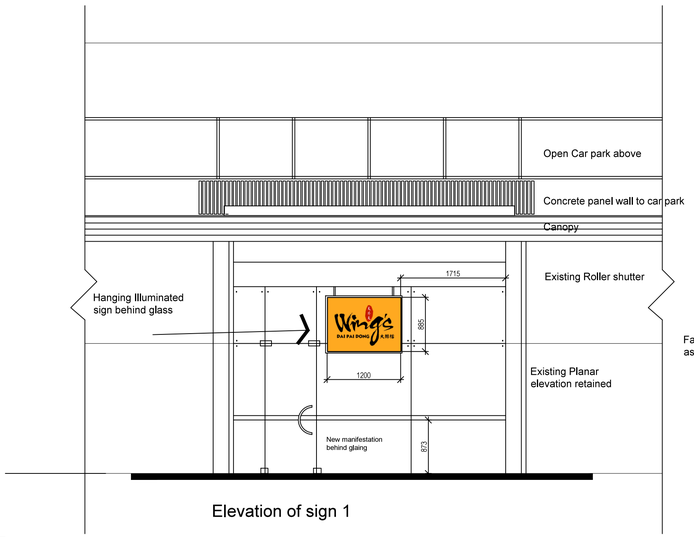

Elevation of sign 1

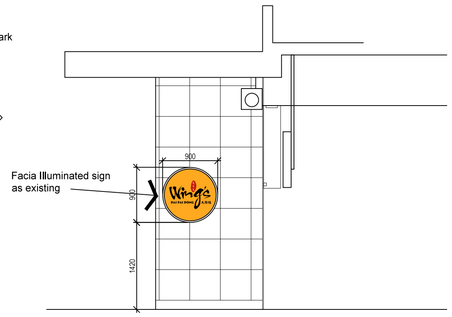

Elevation of sign 2

0 5

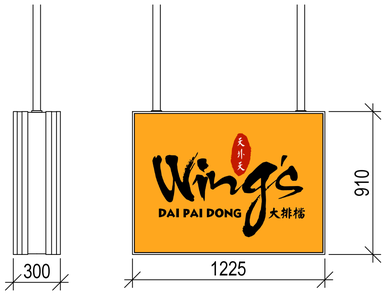

Illuminated sign behind Planar glazing.
Dimensions are approximate only
Illumination 900 cd/m

Sign detail 1/20

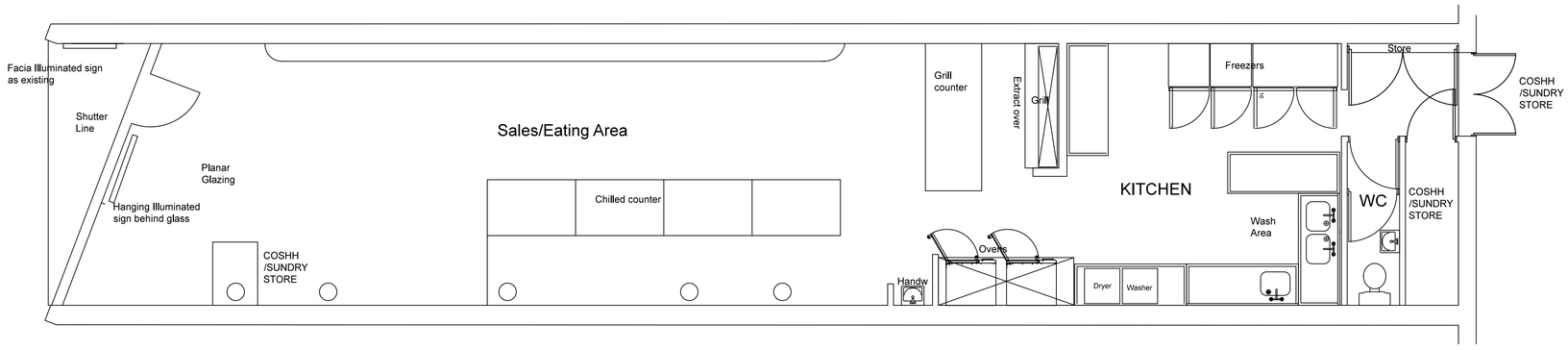

Plan as Proposed

Planning

rev		date	dr by	app by
A	Sign Detil added at planners request	22/04/12	dh	ss
original drawn by (name)	Autocad	02.04.12		

D&D Architecture and Consultancy
t 07788 544046
f 0170686940
e david.holmes@architectureandconsultancy.co.uk

client	Mr Wing Sing Chu
project	Proposed eat in/Takeaway
drg	37 King Street West, Manchester Illuminated signage proposed

scale	sheet size	project no.	drg no.	rev
1:50 @ A1	A1	2012.003	004	A

DO NOT SCALE FROM THIS DRAWING