SAN01-P1-001
Construction Detail

Sign Type P1 - Construction details

Scale 1:10 @ A3

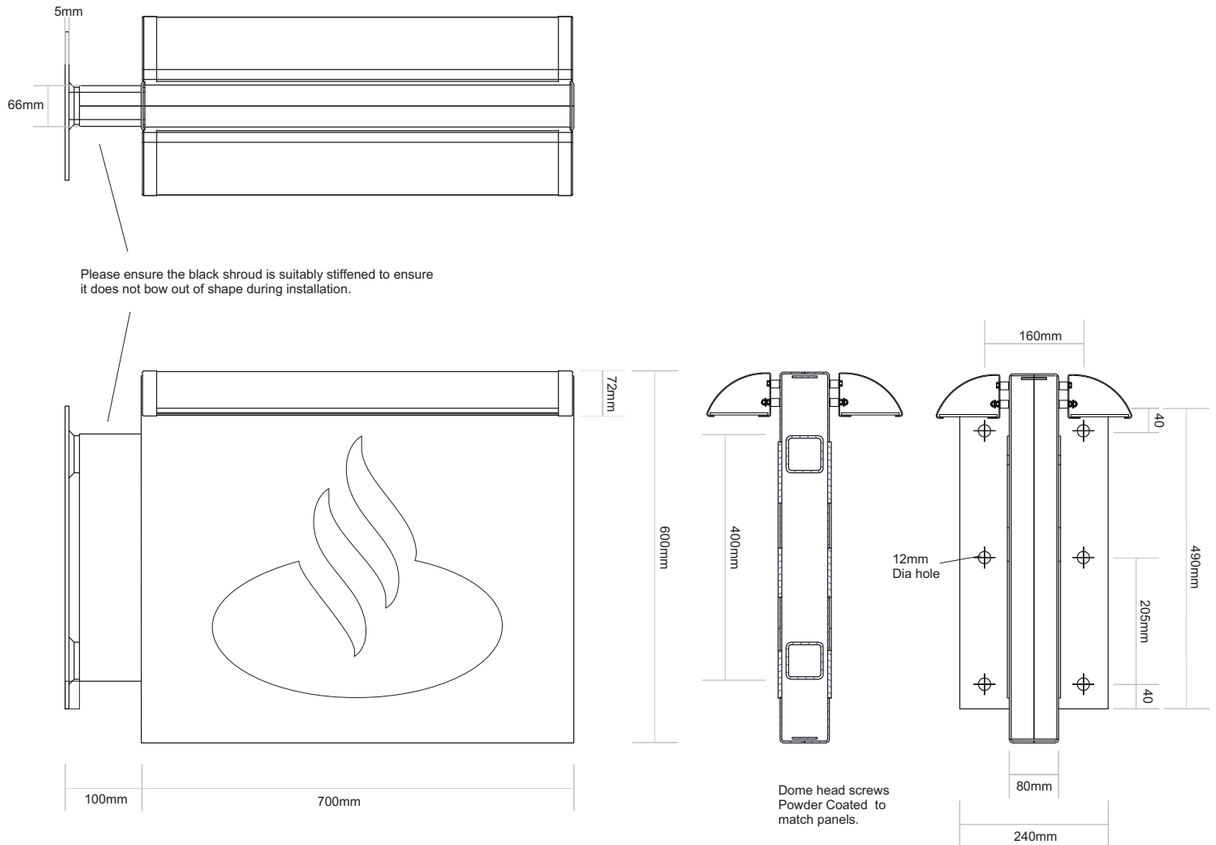

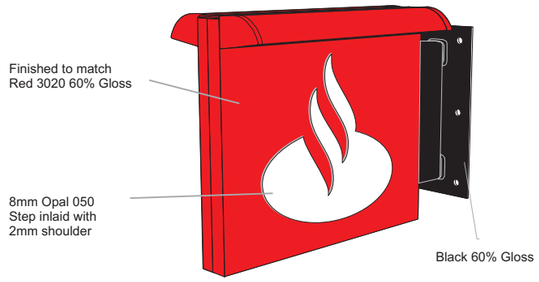

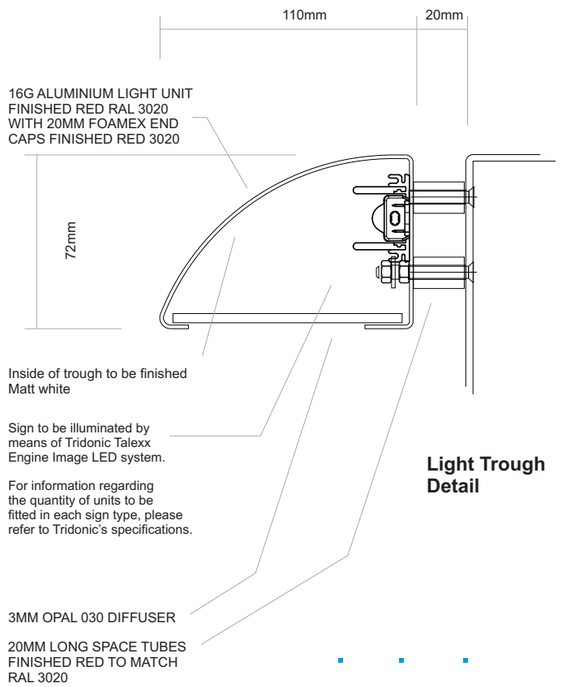

Light Trough Detail

Not to Scale

Scale 1:10 @ A3

0mm ▬▬▬▬▬▬▬▬▬▬ 500mm

©Copyright 2009 Insignia Projects Limited. This document is not to be copied, adapted or distributed without prior written consent from Insignia Projects Limited