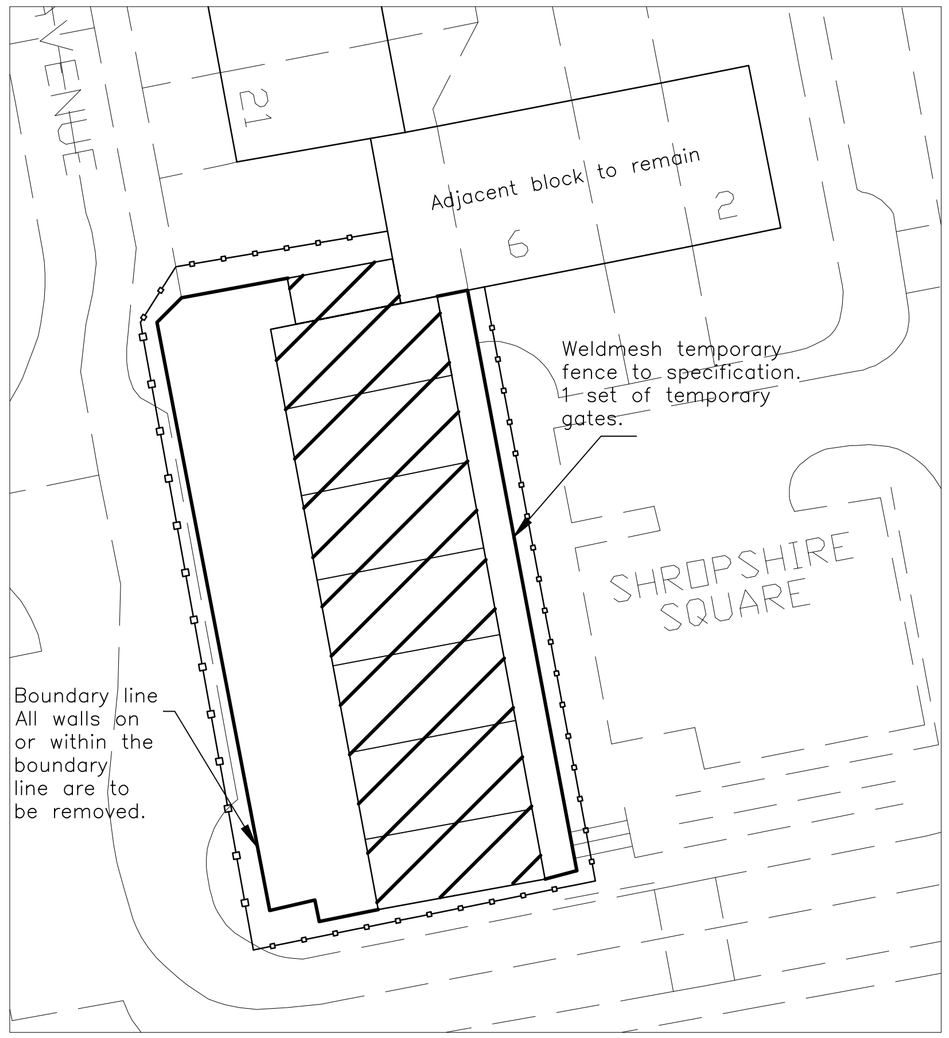

B18–39 Trowtree Avenue – Existing

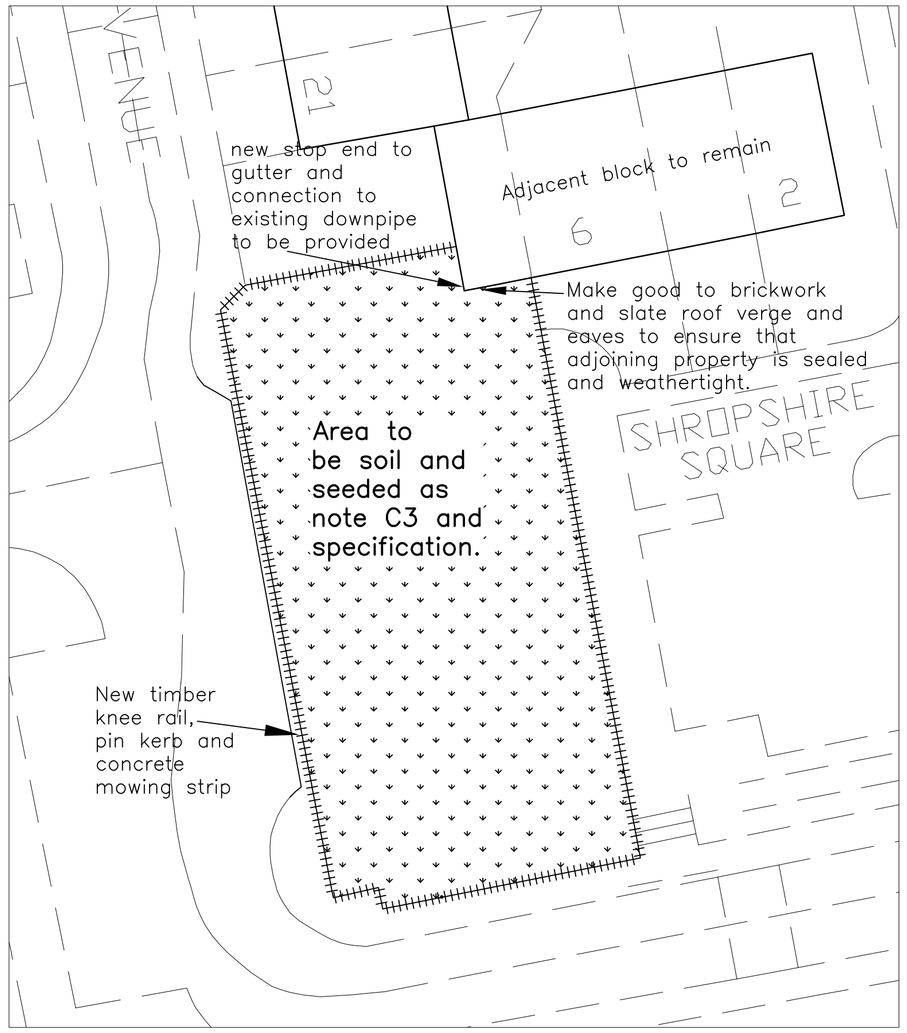

B18–39 Trowtree Avenue – Proposed

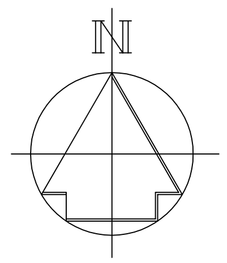

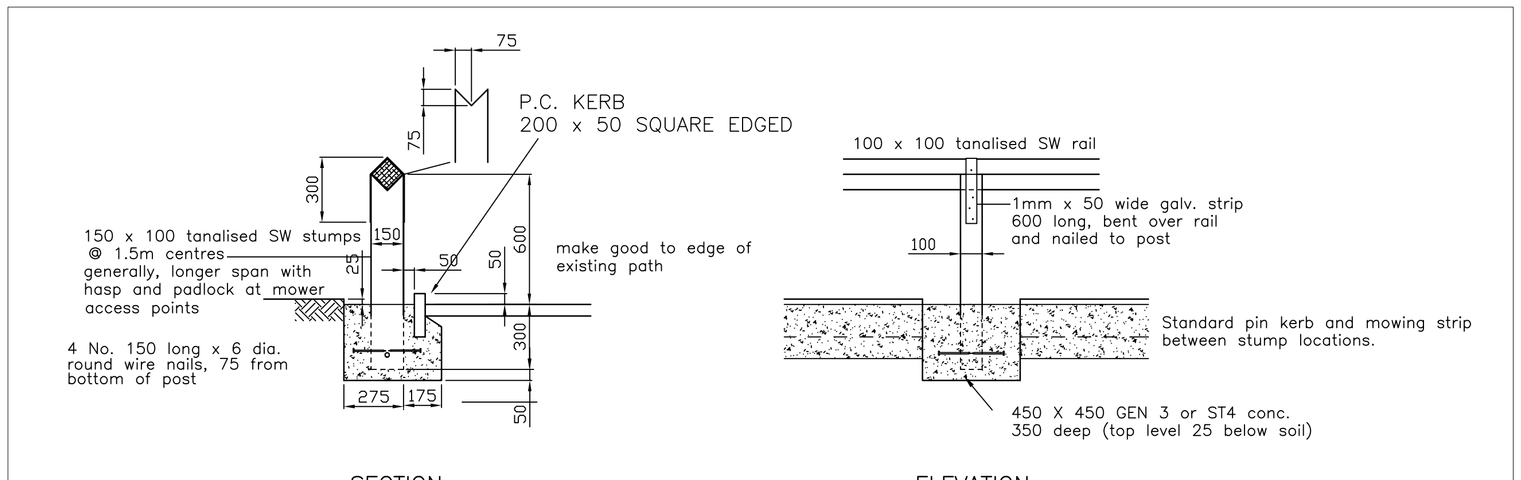

TIMBER KNEE RAIL DETAIL 1:20 (for location see plans)

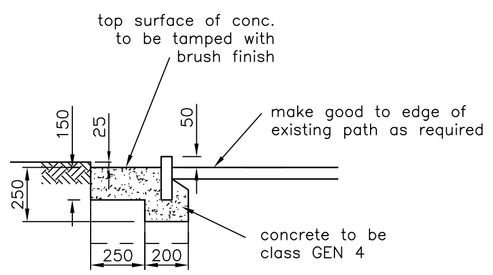

PIN KERB AND MOWING STRIP DETAIL (1:20)

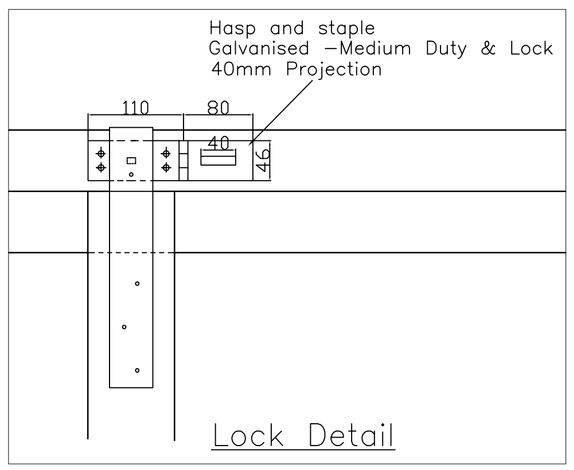

Lock Detail

KEY

Temporary weldmesh fencing.

New timber knee rail, concrete mowing strip and pin kerb. To include one removable section with hasp, staple and padlock each end.

Buildings to be demolished.

Area for soil and seed finish.

SCOPE AND MANAGEMENT OF THE WORKS

B1. A pre–tender inspection must be carried out by the Contractor who must fully appraise the condition and structural complexity of the buildings to be demolished and make due allowance for the difficulties involved. Details shown on any archive drawings provided cannot be assumed to represent existing construction, without verification by contractor's site inspection.

B2. The Contractor must apply for and obtain any temporary footpath closures necessary for the safe completion of his works.

B3. The existing buildings to be demolished are shown on the plans. They are to be cleared of all fixtures, fittings, furnishings, equipment, debris and other unwanted items, which must be removed from site.

B4. All structures within the boundary lines are to be demolished as shown on the drawings and described in the Specification. All walls are to be taken down to 1.0m below ground level if appropriate and all foundations removed. Unless shown otherwise on plan, all concrete paving, existing areas of tarmac or hardstanding should be broken up and removed from site. The areas where foundations have been removed must be filled with imported clean granular material meeting the hardcore filling specification (clause D20/710A), not demolition rubble.

B5. Basements and underground voids to be cleared of debris, and basement floors punctured prior to filling with consolidated hardcore. See specification clause C20/430A.

B6. Existing manholes to be adjusted to suit final site levels.

B7. Street lights to remain.

B8. All trees are to remain. Bushes to be removed.

B9. Access to site will be via Rostron Avenue.

SITE FINISH & BOUNDARY TREATMENT

C1. Any external paving or tarmac disturbed by the works should be restored to its pre–commencement condition. The Contractor is responsible for photographing and recording the condition of the site before he commences work.

C2. Finished edge levels to match existing ground levels. Surface to be smooth, without dips or irregularities which could cause ponding or preclude mowing.

C3. All areas within the boundary line to be covered with 150mm topsoil on 350mm subsoil and seeded followed by first cut to grass and grass maintenance during defects period, all as the specification.

C4. Boundary treatment to be pin kerb and concrete mowing strip with timber knee rail as shown on plan and details shown on drawing. One section of knee rail to be removable with hasp, staple and padlock each end.

PROGRAMME

D1. Target start date 8th May 2012. Length of contract 8 weeks.

HEALTH & SAFETY HAZARDS

The scheme as drawn incorporates measures taken by the designer to minimise construction hazards where possible and practical. To assist the contractor in the formulation of control measures in his Construction Phase Plan, outline guidance is given below for main hazards which are known to remain:–

1) Possible live services (see note A3 and note on plan regarding live services on the boundary line)– Obtain written confirmation of disconnections prior to commencement, make appropriate physical checks on site, CAT scan for exact location of known services or for suspected "rogue" services.
2) Asbestos (see notes A10, A11)– Act on asbestos report, comply with Control of Asbestos regulations, be vigilant for possible additional asbestos, use asbestos removal sub–contractor from MCC select list, get method statement approved and work checked by MCC Asbestos Group.
3) Falling objects or building collapse during demolition–Provide written method statement regarding method and sequence of work, protection, etc. Issue courtesy copy to the MCC Structural Engineer.

GENERAL NOTES

Addresses of properties to be demolished:–
27,29,31,33,35 Trowtree Avenue M12 5LR
25a to 25f Trowtree Avenue M12 5LR (6 flats)
39a to 39g Trowtree Avenue M12 5LR (7 flats)
18 Shropshire Square M12 5NB (commercial unit)

Works comprise the asbestos removal and demolition of building, followed by site finishes and boundary treatment as described. To inspect the properties during the pricing period, contact Anjam Shahzad tel. 0161 610 4558 or 07901978662.

A1. Refer to the Specification document and risk log in addition to the information given in these notes.

A2. All work will be carried out in accordance with the requirements of the Health and safety at Work Act, B.S.6187, 2000 and Guidance Notes GS29 Parts 1 to 4, Control of Asbestos at Work Regulations 2006 (including Revisions), The management of Health and Safety at Work Regulations 1999 & the CDM2 Regulations 2007.

A3. Generally, all statutory service providers will have been instructed to terminate their supplies to the site and remove any recoverable equipment, in advance of the Contract commencement. HOWEVER, the Contractor must allow for contacting the relevant authorities as soon as he is appointed, and to obtain written confirmations for completed disconnections.

A4. Disconnection of redundant drains – Dig out drains to 1m deep from building to the main and including capping off at the main. Backfill in hardcore to specification –see clause C20/240A.

A5. Retention of drains in use–see clause C20/250.

A6. The Contractor is to be responsible for the provision of a marked up site plan for the Health and Safety File on completion of the demolition, showing the following:

A6.1. The position of all drainage manholes.
A6.2. The location of all service termination points at the site boundaries.
A6.3. The location of all drain caps.
A6.4. The location of any underground obstructions or other features discovered during the removal of foundations and left in place at the direction of the Contract Administrator.

A7. The Contractor is to notify all adjacent property occupiers / owners of the intended demolition works and the anticipated start date.

A8. No site burning allowed.

A9. Contractor's signs with contact details to be erected at the Client's preferred locations. Signs warning of danger to the public to be erected at appropriate intervals around the site perimeters.

A10. Asbestos removal – see asbestos report and specification clauses 390A & 391A.

A11. Contractor to allow a cost as IDENTIFIED RISK for removal of asbestos which is additional to quantities identified in the report.

A12. The Contractor shall assume that cavity fill material is present in all external walls and must allow for its removal in accordance with current health & safety regulations.

A13. The Contractor must provide and erect protective fencing where needed to keep the site secure. Where appropriate, 2.4m high weldmesh fencing should be used, supported by posts as the following alternatives: –
Type 1 – 150x150min. size timber or suitable steel section posts at 2.4m c/c, cast into concrete at their bases.
Type 2 – 175–50min size timber supported at 2.4m centres by steel drums filled with concrete.
It is expected that existing gates will provide suitable access to the site.
Free standing "Heras" type fencing will not be permitted.

A14. Where it is necessary to puncture the pavement to install fence posts, the contractor must apply to the Highways Engineer Tel. 0161 908 5764 for a temporary closure and to complete a New Road & Street Act Certificate. Contractor to check to ensure that no services could be damaged by these excavations. Contractor to include for providing temporary diversions for pedestrians as required by the Highways Engineer. Pavement to be made good on completion to the satisfaction of the Highways Department.

A15. No crusher will be permitted on site.

A16. No weekend working will be allowed except under exceptional circumstances, and with the permission of the Contract Administrator.The Contractor shall work between 08.00am and 16.30pm, Monday to Friday.

A17. The Contractor must provide all necessary hard standings for the operation of mechanical plant.

A18. Contractor to provide all information needed for the Health and Safety File to the CDM Co–ordinator by the date of practical completion.

This drawing has been reproduced from the Ordnance Survey mapping with the permission of The Controller of Her Majesty's Stationery Office Crown copyright. Unauthorised reproduction infringes Crown copyright and may lead to prosecution or civil proceedings.

Rev	Description	Date	by	chkd

MANCHESTER CITY COUNCIL
Corporate Technical Services Group
4th floor Heron House
47 Lloyd St
Manchester
M2 5LE

JOB TITLE: "TROWTREE BLOCK", BUILDING RECYCLING
DRAWING TITLE: SITE DETAILS

COMPUTER FILE	DATE	SCALE	DRAWN	CHECKED
	Jan. 12	1:250@A1	ML	

JOB NO.	DRAWING NO.	REVISION
XX/40002	99/02	