This drawing is the property of Technical Signs and must not be reproduced in part or in full without prior consent of Technical Signs.

Proposed

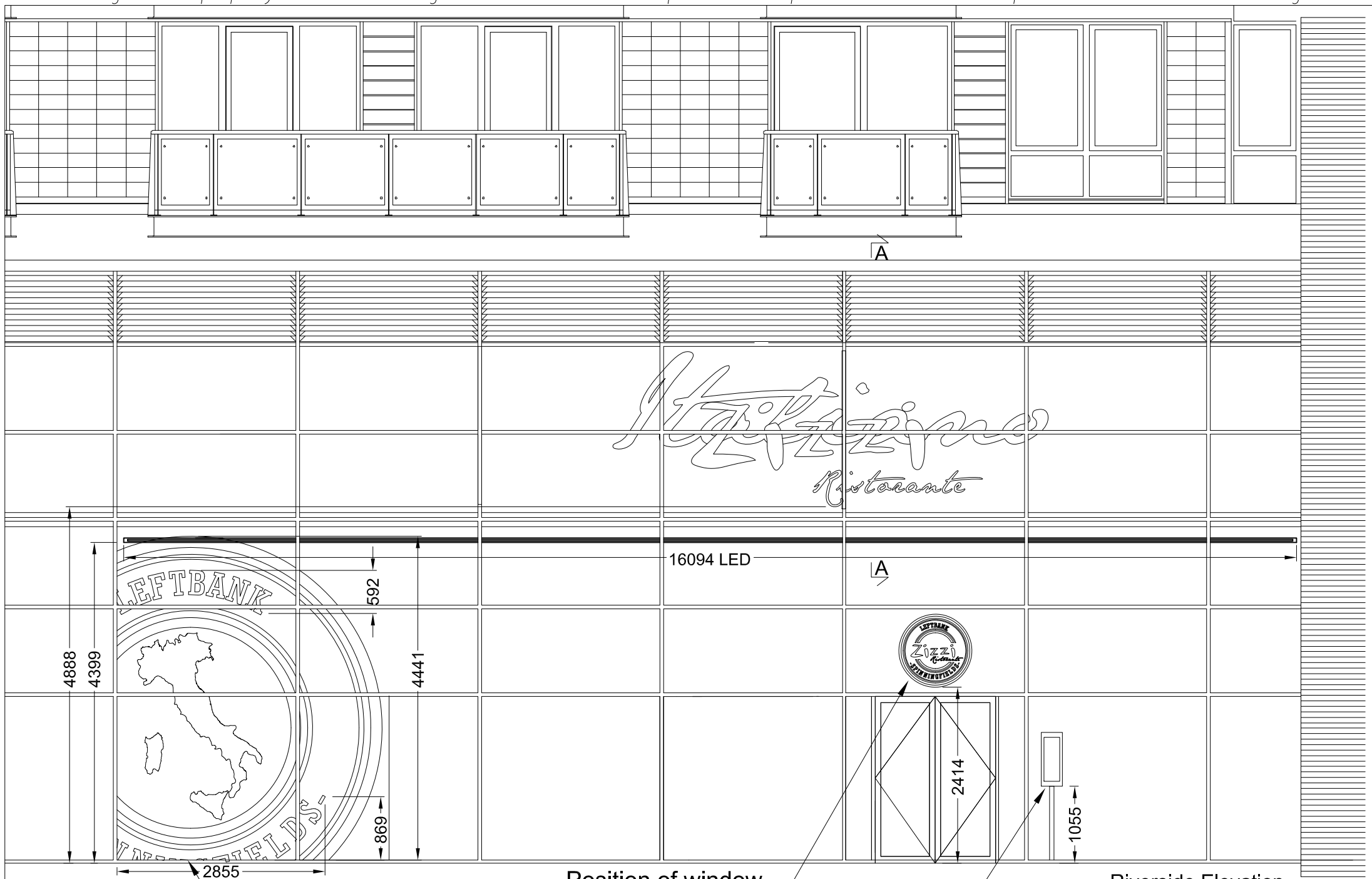

Riverside Elevation
Scale 1:75

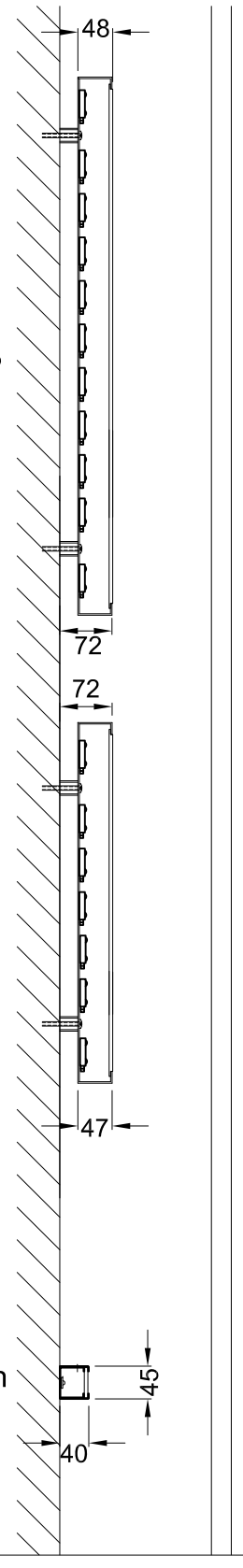

Section A-A through text and lightline
Scale 1:10

'zizzi'
Built up metal letters with metallic grey faces (bodycraft basecoat C2-261 with a semi gloss lacquer).
Fitted with 5mm island cut cream 133 acrylic faces.
Internally illuminated via low energy white LEDs for face illumination.

'ristorante'
Built up metal letters finished satin pink PMS 215c.
Fitted with 5mm thick clear acrylic faces with pink vinyl attached.
Internally illuminated via low energy white LEDs for face illumination.

All fixed via spacers to the internal bulkheads behind the glazing.
Internal bulkheads to be finished metallic grey (bodycraft basecoat C2-261 with a semi gloss lacquer).

'Italiano'
Painted light grey to the bulkhead

Face illuminated pink LED lightline fixed to lower part of bulkheads which are finished cream. Metal lightline finished pink with opal acrylic faces having pink vinyl applied.

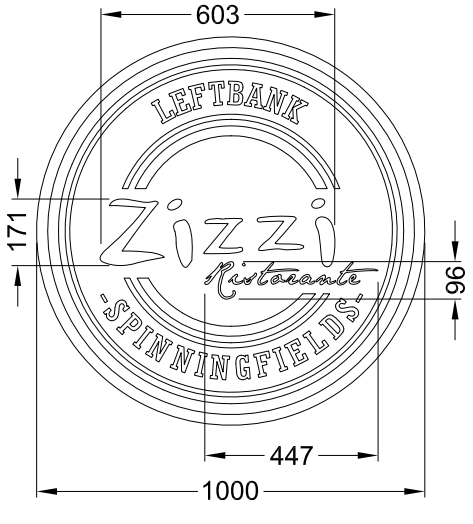

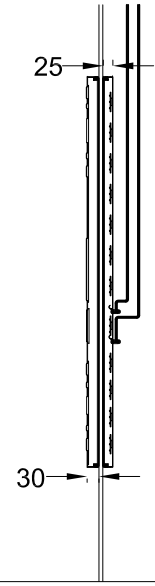

Roundel mounted to glazing - 2 off
Scale 1:20
Built up front halves of the roundels to be fret cut and folded descaled stainless steel finished metallic grey.
Faces to have pushed through 5mm cream acrylic, with the 'ristorante' text being red acrylic.
Backs of this front half to be clear acrylic fixed to face of glass via clear VHB tape.

Built up back halves of letters from folded descaled stainless steel finished metallic grey.
Fronts of back half to be 1TL2 opal acrylic fixed to inside face of glass via clear VHB tape.

Internally illuminated via low energy white LEDs fitted into backs for face illumination of roundel.

Technical Signs
Floor 1 - Unit 3
Hille Business Centre
132 St Albans Road
Watford, Herts, WD2 4AE
Tel: 01923 811999
Fax: 01923 811998
E-mail: info@technicalsigns.co.uk

Client	Zizzi
Address/Job details	Unit 5B Leftbank Spinningfields Manchester M3 3DS Proposed Signage
Job No	
Drawn by	DN
Date	09/12/11
Scale	As specified (A3)
Drawing No	308003-4
Rev	