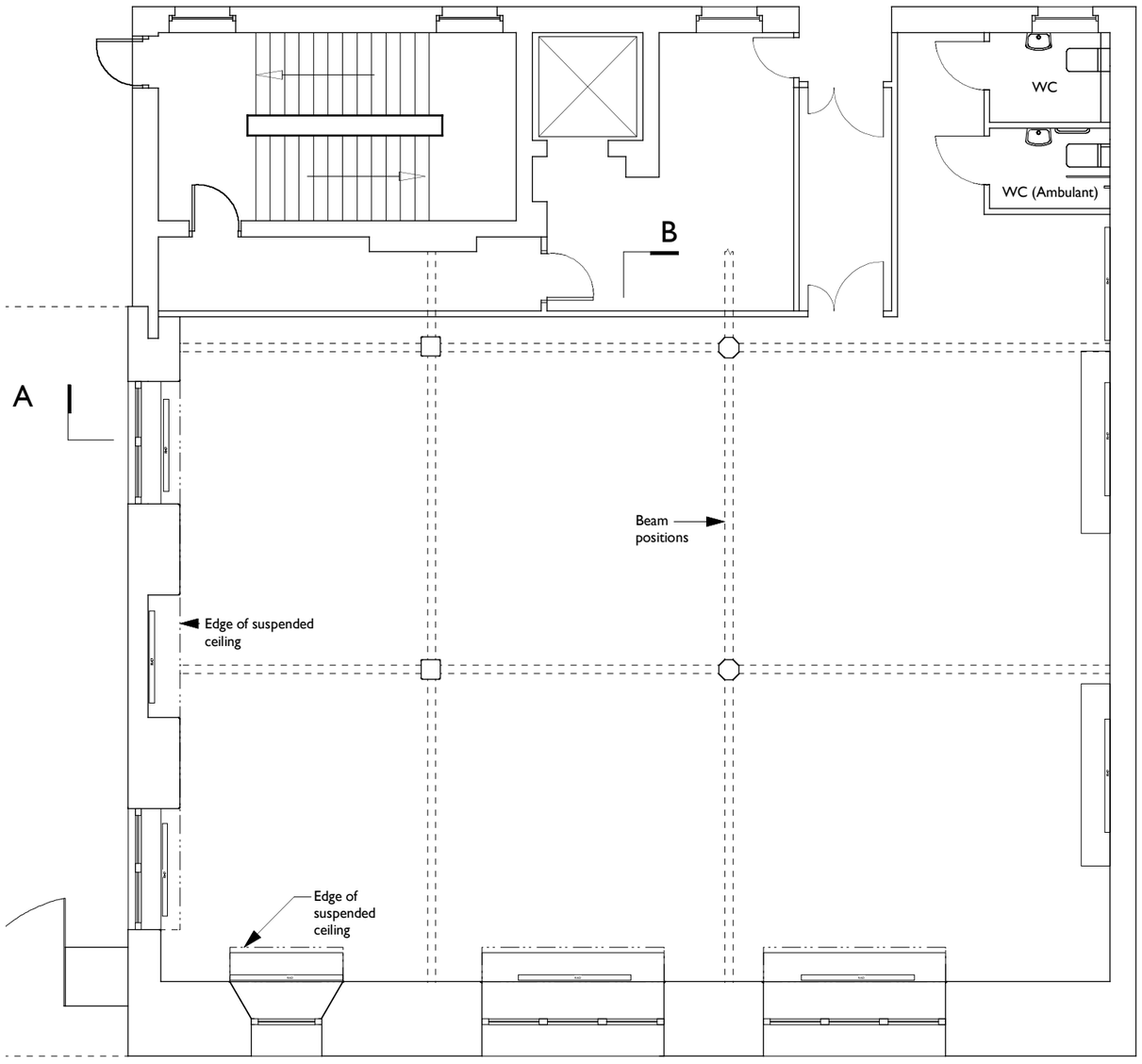


GREAT BRIDGEWATER STREET

Suite Plan

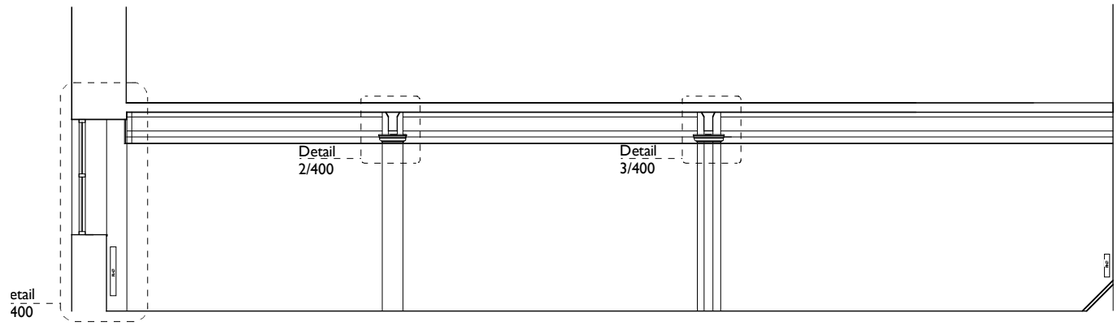


Section AA

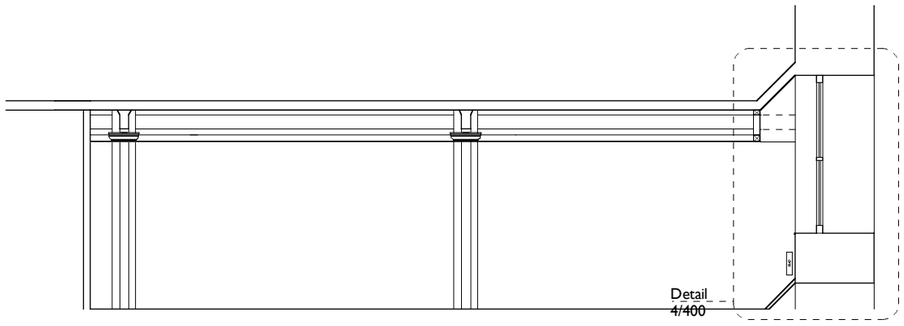


Section BB

| - | - | - |
|---|---|---|
| description | date | rev |

Churchgate House - Ground Floor Suite 1
for
CBRE

**Floor Plan**
Existing

scheme 1450
no. **E(100)**
rev -

scale 1:100@A3
date June 2012
drawn HKW

makinarchitecture
URBAN ARCHITECTS & DESIGNERS
www.makinarchitecture.com
t 0161 236 0051
e architect@makinarchitecture.com

COPYRIGHT OF MAKIN ARCHITECTURE
DO NOT SCALE FROM THIS DRAWING
DIMENSIONS TO BE CHECKED ON SITE

***SK** sketch **P** proposed **T** tender **C** construction **AB** asbuilt*