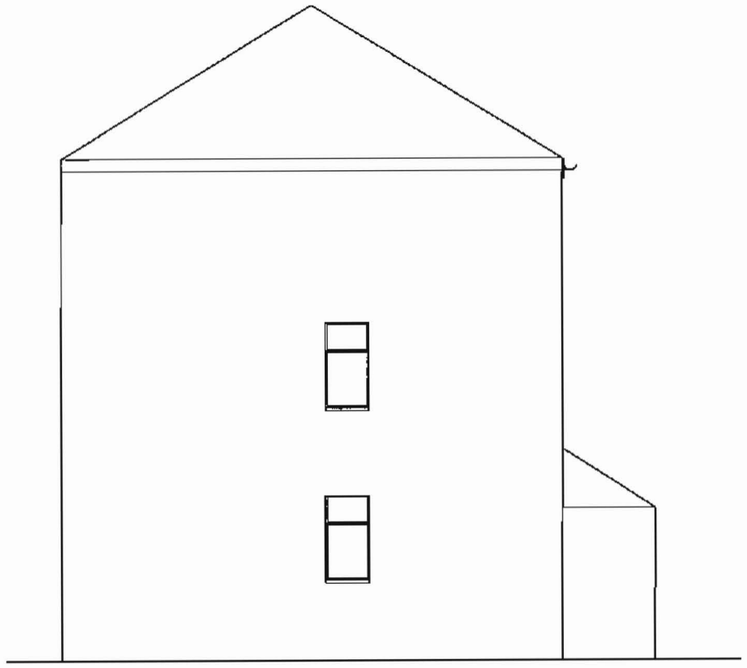

Elevation 'A'

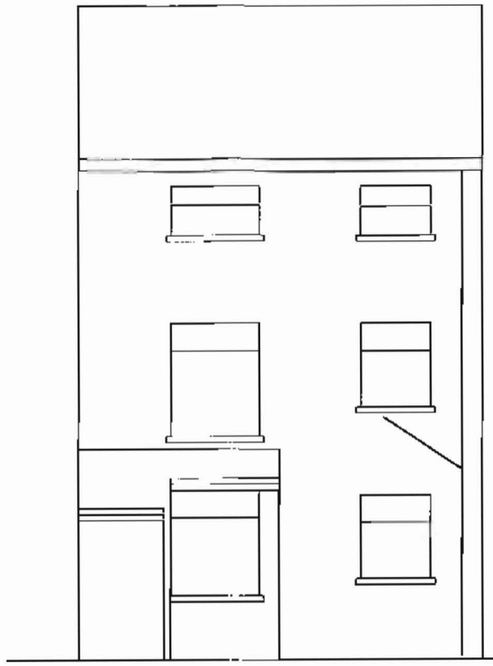

'B'

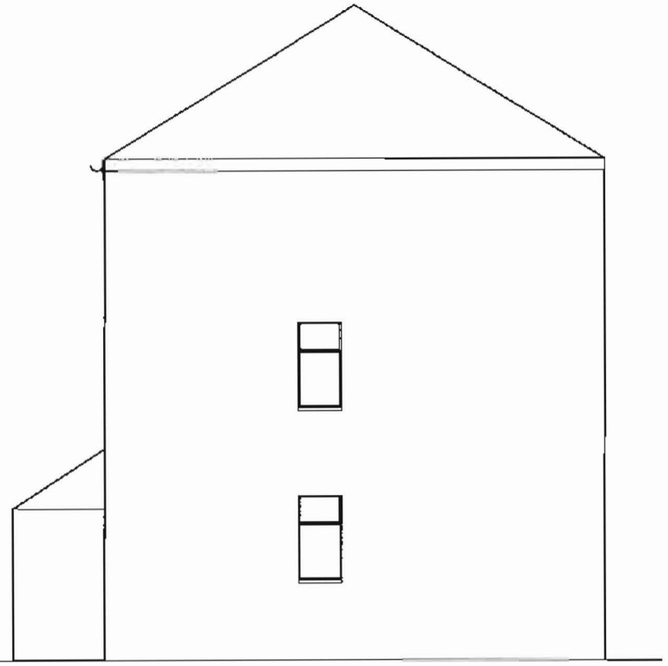

Elevation 'C'

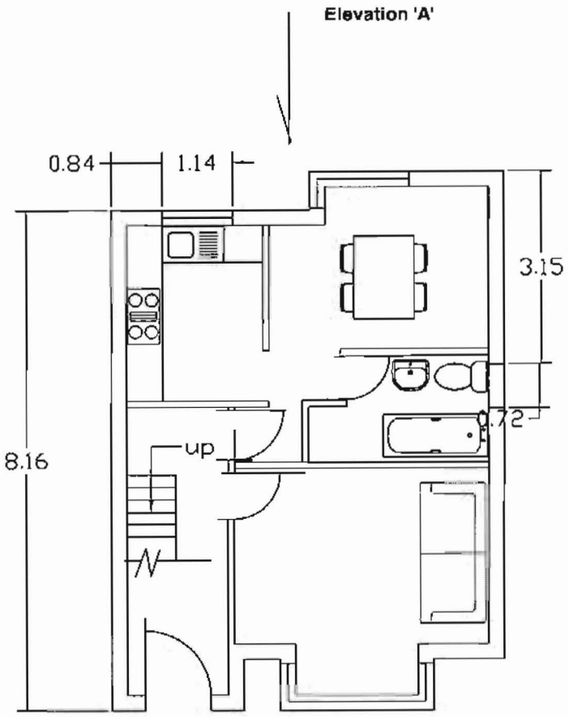

Existing Floor Plan

PLANNING
ACKD
EPLIED
ECD 16 APR 2008

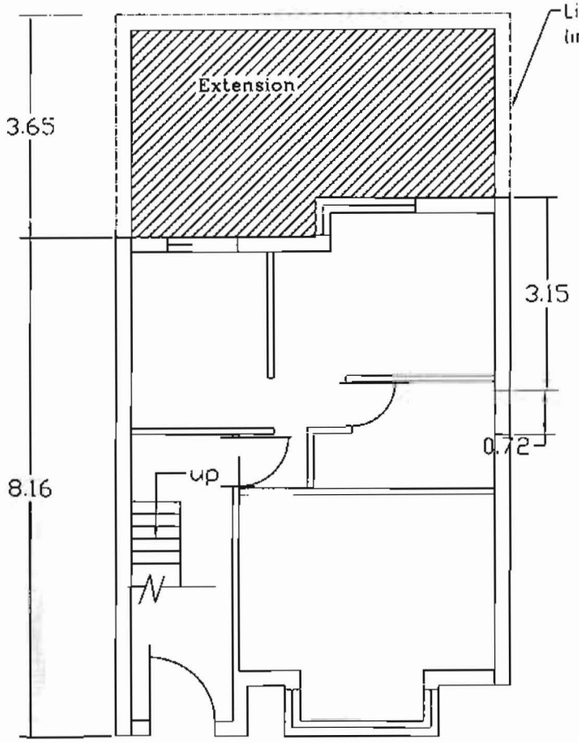

Proposed Floor Plan

Planning Application No 084473/FH/2007

This drawing is for Building Regulations Approval and Planning Permission Only. The contractor is required to take all the measurements and inform the client of any discrepancies.

Issue Date:

Revisions

No.	Date	Description

Home Sweet Home
Architectural Design Service
428 Cheetham Hill Road
Cheetham Manchester M8 9LE
Tel 0161 795 6385

Title :-

Existing Plan and Elevations

Project for :-

Mr A Kumar Puri
1 Linn Street, Crumpsall
Manchester M19 1LZ

Project Title :-

Proposed Single Storey Rear Extension

Date April 2007

Scale 1 : 100 Dwg N0. 01 / 32