CI/SfB | | | Ln6 | |
March 2004

VISQUEEN GAS BARRIER

VISQUEEN GAS BARRIER PRE-WELD

VISQUEEN GAS BARRIER HOUSING KIT



Complete protection against methane and carbon dioxide

VISQUEEN
BUILDING PRODUCTS

Why the need for a protective gas barrier combined with damp proof membrane?

The Building Regulations (Approved Document C) require that proper precautions be taken to prevent danger to health and safety when building on contaminated land. However, a number of significant political and economic factors have led to the need for commercial and residential developments to be located on sites with the potential for gas contamination:

- Political pressure requiring the reclamation and rehabilitation of former industrial sites, including former gas works.
- An acute shortage of available inner city and urban sites.
- Planning consent difficulties in rural locations.

In all cases, those responsible for the planning and implementation of construction projects where gas contamination may occur, have a duty of care to protect against health risks and may risk legal action if proper precautions - including the use of Gas Barrier Membrane - have not been taken.

The solution - Visqueen Gas Barrier

Visqueen Gas Barrier offers a safe solution for the protection of buildings and occupiers against methane, radon and carbon dioxide. When installed in accordance with BRE Report: Construction of New Buildings on Gas Contaminated Land, Visqueen Gas Barrier is an essential component of a gas protection system. It is also a fully effective damp proof membrane.

Visqueen Gas Barrier utilises advanced multi-layer lamination processes to create an impenetrable and lasting protection whilst retaining flexibility for easy installation.



What gases are involved?

Three common gases require an integrated foil barrier solution:

Methane

Description:	An odourless flammable gas that is explosive when released to atmosphere at levels as low as 5% and exposed to a source of ignition.
Found:	Methane is formed wherever there is below-ground degradation of organic substances e.g. landfill sites, sewage treatment areas, mining localities and peat bogs.
Protection:	Visqueen Gas Barrier System.

Radon

Description:	A naturally occurring radioactive gas that is colourless and odourless. Radon is harmless when vented to atmosphere but life-threatening if allowed to accumulate in buildings. Radon is the second largest cause of lung cancer after smoking.
Found:	Large areas of the UK are affected.
Protection:	Visqueen Radon Membrane System. (See separate technical data sheet for further information).

Carbon Dioxide

Description:	A colourless gas that in high concentrations can result in asphyxiation.
Found:	The gas is formed by the oxidation of carbon compounds such as in landfill sites
Protection:	Visqueen Gas Barrier System. Visqueen CO2 Gas Membrane. (See separate technical data sheet for further information).

Why is Visqueen Gas Barrier film the preferred option for specialist construction and groundwork treatments?

Five layer, precision co-extruded single sheet film provides one piece barrier for safety, security, flexibility and durability

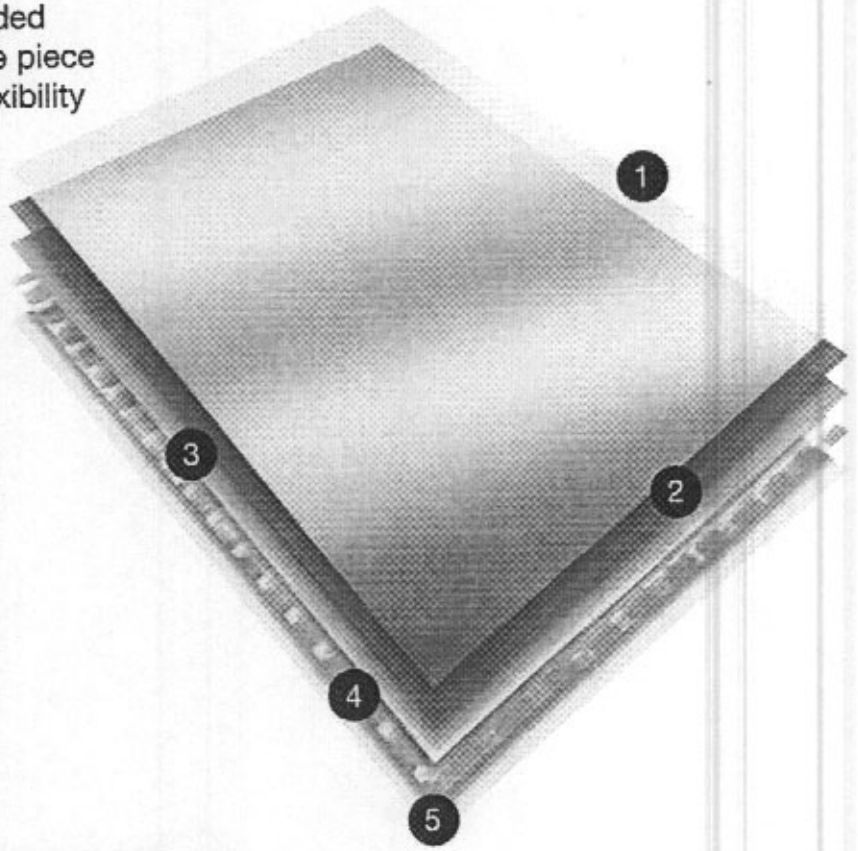

Features and Benefits:

- Strength
- Performance
- Flexibility
- Triple-gas Protection
- Damp Proof Protection
- High Puncture and Impact Resistance
- Tough Tear Resistance
- Easy to Install
- Essential part of Gas Protection System

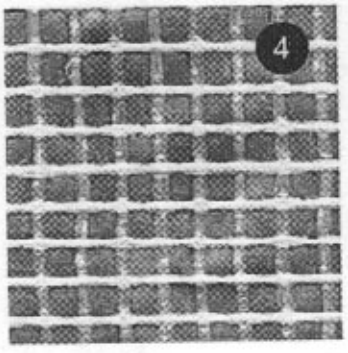

Split Yarn HDPE

1 **LDPE**
Tough polyethylene outer layer provides absolute protection against moisture ingress

2 **Visqueen Blue LDPE**

3 **Aluminium Foil**
Central shield layer of aluminium provides impenetrable gas-reflecting properties

4 **Split Yarn HDPE**
Adhesive split yarn woven matrix provides 3-D tear resistance

5 **LDPE**
Protective polyethylene outer layer confers additional tensile and tear strength properties

Easy Installation

Visqueen Gas Barrier has been developed specifically for speed and ease of installation and the following general guidelines should be adopted.

Installation Guidelines

Visqueen Gas Barrier and ancillary components must be installed in accordance with the recommendations of Building Research establishment BRE 414 "Protective measures for housing on gas contaminated land", BRE No: 211 "Radon: guidance on protective measures for new dwellings" and BRE No: 212 "Construction of new buildings on gas contaminated land".

The product is not intended for use where there is a risk of hydrostatic pressure.

Where additional ventilation is required, Visqueen Gas Barrier should be installed with the Visqueen Gas Ventilation System. Details available on request.

Laying the Barrier

Visqueen Gas Barrier should be installed on a blinded or smooth surface allowing adequate overlap for jointing between the sheets and avoiding bridging (i.e. areas of unsupported membrane).

To avoid slip or shear planes it is not recommended to take membranes through the wall. In order to provide a continuous barrier across the cavity Visqueen Gas Resistant DPC should be sealed to the membrane, taken through the blockwork, up the wall and incorporated below the damp proof course on the outer leaf.

Visqueen Gas Resistant (GR) DPC should be installed in accordance with BS 8215: 1991, BS 8000: Part 3, 1989 and BS 5628: Part 3: 1985. All horizontal DPCs must be bedded on both sides with fresh mortar. All DPCs must project through the full width of the wall, including any externally applied rendering and project 5mm beyond the finished external face.

All cavities must be kept clear of mortar droppings and other debris. Any mortar droppings reaching the DPCs must be removed before they harden, avoiding the use of sharp objects for removal.

Jointing

Visqueen Gas Barrier should be overlapped by at least 150mm and bonded with Visqueen Double Sided Tape. This joint should be secured with Visqueen Foil Backed Girth Jointing Tape. Ensure that the membrane is clean and dry at the time of jointing.

Perforations or punctures in the sheet should be covered with another part of the sheet and have an overlap of at least 150mm and the laps sealed with Visqueen Double Sided Tape and secured with Visqueen Foil Backed Girth Jointing Tape.

Airtight seals should be formed around all service entry points. Preformed Top Hat Units are available for sealing around pipe entries. The base of the preformed unit should be sealed using Visqueen Double Sided Jointing Tape.

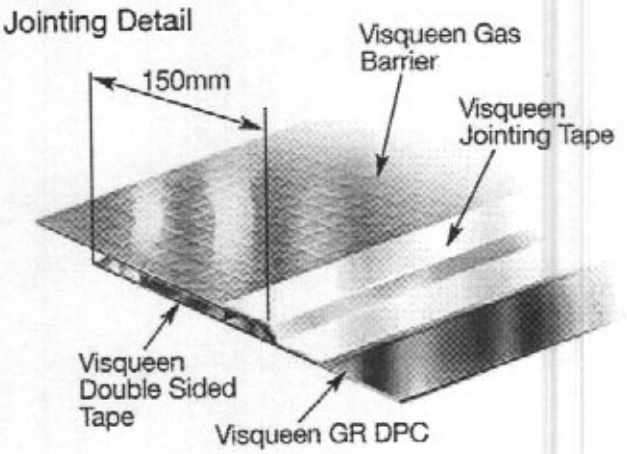

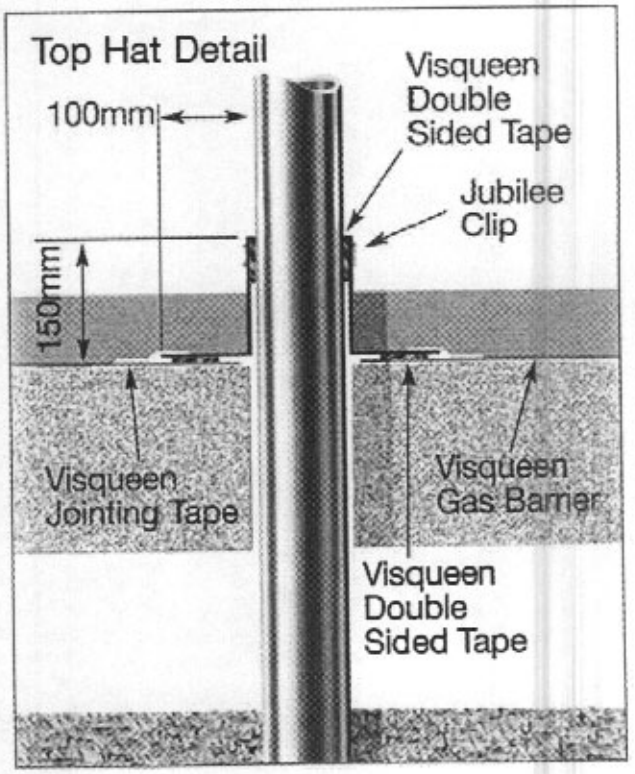

PRODUCT SPECIFICATION

Length:	30m, 60m
Width:	1.6m
Square Metres per roll:	48m², 96m²
Weight per sq. metre:	350gsm
Colour:	Blue/Silver
Overall thickness:	300mu
Thickness Aluminium Foil:	20mu

TECHNICAL PERFORMANCE

Weight per Unit Area:	350 g/m²
Tensile Strength (BS 2782: Part 3:320A):	43.7N/mm²
Tear Strength (BS 2782: 360B):	216 N/mm
Methane Permeability:	Less than 0.001 mls/m²/24hr
Water Vapour Permeability (BS 3177):	0.03 g/m²/day

Covering

Visqueen Gas Barrier should be covered by a screed or other protective layer as soon as possible after installation. Care should be taken to ensure that the membrane is not punctured, stretched or displaced when applying the screed or concrete. A minimum thickness of 50mm screed is recommended.

When reinforced concrete is to be laid over the barrier the wire reinforcements must be prevented from contacting the barrier. It is recommended that the barrier is covered with screed before positioning the reinforcement.

When underfloor heating is being installed, it is recommended that the barrier is positioned between the blinded hardcore and insulation to protect the installation from moisture and to avoid any risk of overheating the membrane.

External and internal corners should be rounded. Where this is unavoidable then the angles must be strengthened with a 300mm wide strip of Visqueen Gas Barrier.

Storage and Handling

Visqueen Gas Barrier is classified as non hazardous when used in accordance with the relevant Code of Practice (CP 102 1973). The product is chemically inert and is not affected by acids and alkalis that may be present in the sub-soils.

Exposure to ultraviolet light will embrittle the product. The material is not therefore recommended for uses where it will be exposed to long periods of outdoor weathering. However, weathering will not occur when the membrane is installed in accordance with CP102 1973.

Care should be taken to avoid accidental damage when handling Visqueen Gas Barrier on site.

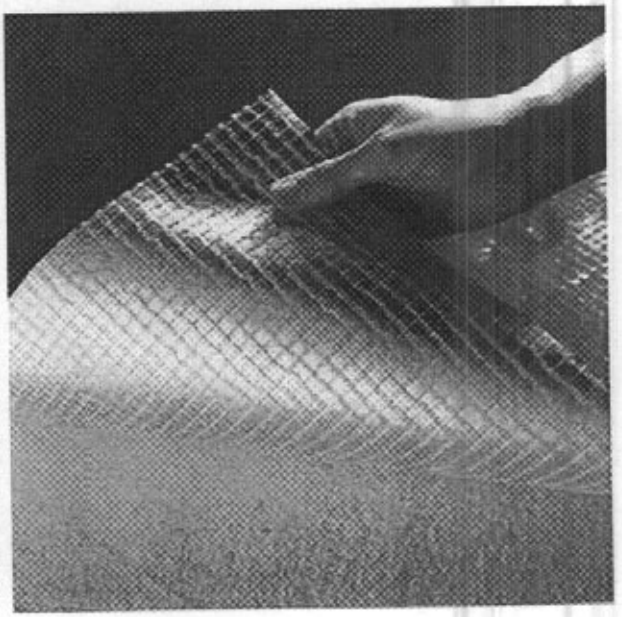

VISQUEEN GAS BARRIER

Gas Barrier on Suspended Ground Floor Slab

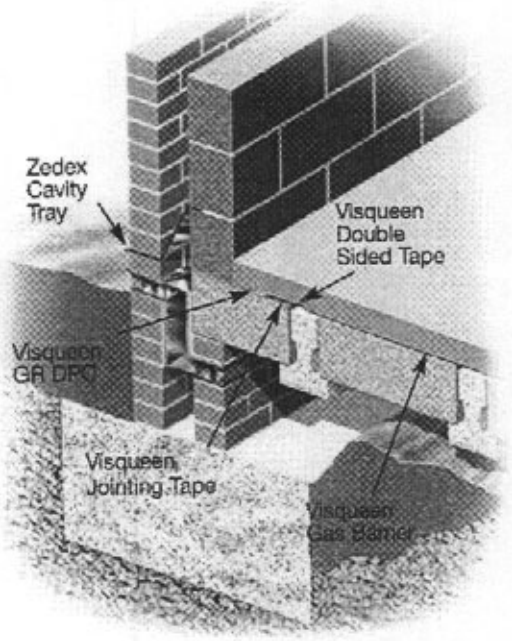

Gas Barrier Below Raft Foundation

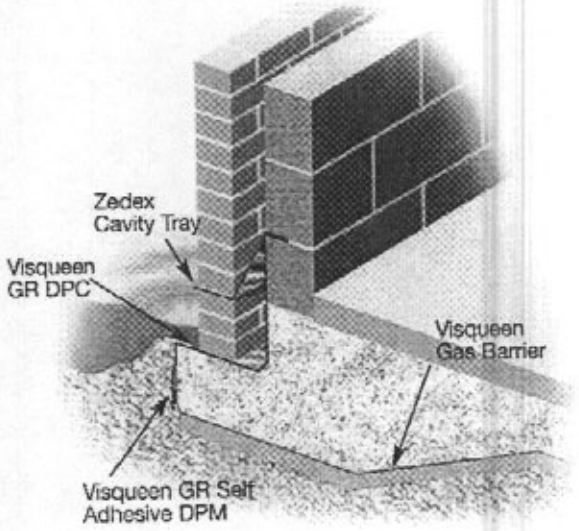

Gas Barrier Below Ground Bearing Slab

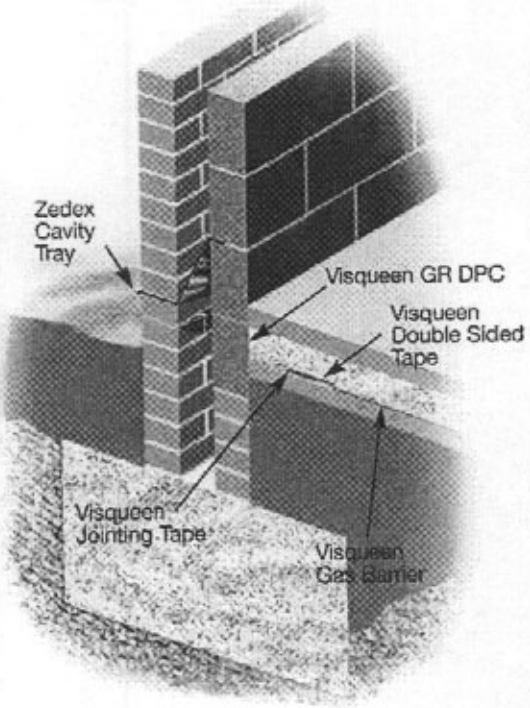

Note: Illustrations are for guidance only. Detailed installation drawings are available on request.

Components of the Visqueen Gas Barrier System

Visqueen Foil Backed Girth Jointing Tape

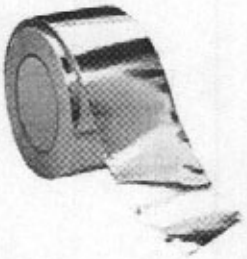

Visqueen Foil Backed Girth Jointing Tape is a single sided tape which provides added security against any potential leakage path. Always ensure that the membrane is clean and dry at the time of installation.

	Visqueen Double Sided Jointing Tape	Visqueen Foil Backed Girth Jointing Tape
Roll Length (m)	10	50
Roll Width (mm)	50	75



Visqueen Double Sided Tape

Visqueen Gas Barrier Jointing Tape is a double sided butyl based jointing tape. The use of a single release paper assists ease of application on site. Visqueen Gas Barrier Jointing Tape is suitable for use in the lapping and sealing of Visqueen Gas Barrier.

Pre-formed Top Hat Units



Visqueen Top Hat Units are available in various sizes, the most common being 110mm diameter. Visqueen Top Hat Units should be used to form airtight seals around service entry points. The base of the Top Hat Unit should be sealed to Visqueen Gas Barrier using Visqueen Gas Barrier Jointing Tape and Visqueen Foil Backed Girth Jointing Tape. The unit should be fastened to the service pipe using a combination of Visqueen Gas Barrier Jointing Tape and a jubilee clip system to provide fastness.

Visqueen Gas Resistant DPC



Visqueen Gas Resistant Damp Proof Course is a flexible polyethylene DPC with an aluminium foil designed to prevent the transmission of carbon dioxide, radon and methane gases. This is in addition to the products usage as a damp proof course. Resistance to carbon dioxide, radon and methane is achieved by an integral aluminium film.

VISQUEEN GAS RESISTANT DPC	
Typical Properties	
Dimensional Details	
Roll Length	30m
Width	up to 1000mm
Weight	0.5kg/m²
Thickness	0.5mm

Visqueen Gas Ventilation System



Visqueen Gas Ventilation System a comprehensive system to prevent gas ingress when installed with Visqueen Gas Barrier.

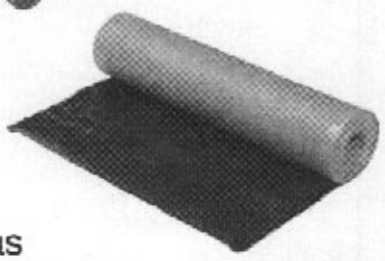

Visqueen Gas Resistant Self Adhesive Membrane

Visqueen Gas Resistant Self Adhesive Membrane is designed to prevent the transmission of carbon dioxide, radon and methane gases in tanking applications or where hydrostatic pressure is present. For other applications Visqueen Gas Barrier should be considered.

VISQUEEN GAS BARRIER PRE-WELD

Offsite fabrication of Visqueen Gas Barrier Panels offers many critical benefits to designers and developers:

- Up to 65% time saving over traditional tape and roll methods for sealing laps.
- Fast track installation on site.
- Reduced wastage through off site fabrication.
- Visqueen's pre-welding technology ensures a high integrity gas membrane.

Recent building techniques have seen a tendency towards the use of off-site fabrication in many sectors of the building process. It seems logical therefore, that Visqueen Building Products should, in recognising this trend, provide an economical and time saving solution to the needs of the modern developer who require a proven gas barrier system.

With increasing numbers of housing and industrial developments taking place on gas contaminated sites, developers must ensure that a high integrity gas protection membrane is installed yet continue to operate under the time related pressures of today's fast track building programmes.

VISQUEEN PRE-WELDED GAS BARRIER JOIN

Technical Data	
Tensile Strength MOAT 27 1983 5.5.2	35.3 daN/50mm
Resistance to Water Pressure M.O.A.T 27 983 5.1.4 Resistance to 6m head of water pressure	Pass, No leaks

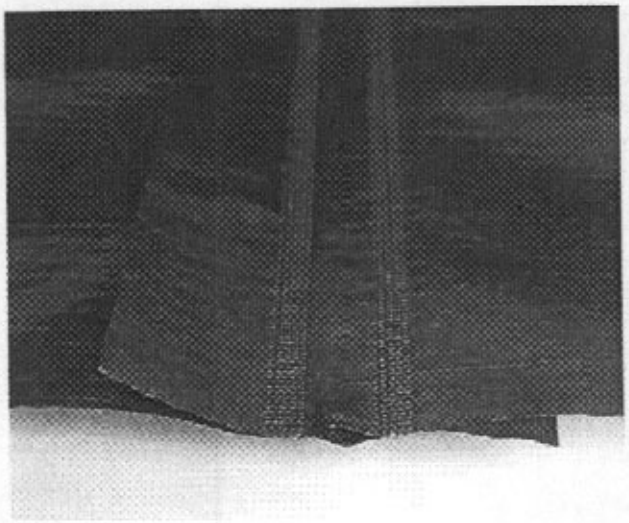

Welding technology for joining membranes is well established but has previously only been available when specialist contractors have been used on-site. It is widely recognised that joining sheets of membranes on-site is often the most vulnerable element in the installation of a gas protection system.

By working closely with the designer in early project stages, Visqueen can produce a complete gas protection package that is delivered direct to site when required. The use of pre-welded sheets means that the designer can now have increased levels of confidence as all joins are constructed in factory conditions and have been rigorously tested for airtightness before reaching site.

> "Visqueen Pre-Welded Gas Barrier- up to 65% faster than installation by tape and roll"

Additionally, as there are fewer taped joins to be performed on site, the gas barrier installation is less affected by adverse weather conditions (to be effective, taped joins must be formed in dry conditions).

Visqueen Gas Barrier is pre-welded in the factory to the exact dimensions of the footprint to the building and can be dispatched with the correct quantities of components such as, top hats, jointing tapes and other components as required to form a high integrity gas barrier system.

Factory fabrication helps reduce wastage on-site and Visqueen's pre-welded joints ensure that a high integrity airtight barrier is always achieved. The reduced time for joins on-site ensures that for each footprint the installation time is significantly reduced. Each footprint can be identified by a unique reference, thereby, ensuring that on-site ordering is straightforward.

Installation

Pre-welded Visqueen Gas Barrier is installed in the same method as rolls of gas barrier, see installation Section for more information.

VISQUEEN GAS BARRIER HOUSING KIT

In response to today's rapid build housing programmes and with the use of brownfield sites becoming more commonplace, Visqueen Building Products have developed a new kit system which makes it easier for developers to manage the installation of a gas protection system.

The Visqueen Gas Protection Kit System assists developers in ensuring that a high integrity gas protection system is installed without any delays to the construction timetable. Typically, delays can occur through insufficient or incorrect materials being ordered and the time consuming nature of ensuring all gas barrier joins are taped and made gas tight on-site.

The Visqueen Housing Gas Protection Kit System enables all relevant products to be supplied when required on-site in a convenient kit form, allowing for faster installation. The use of off-site fabrication processes ensures that the quality and performance of the gas protection barrier is not compromised.

- A gas protection system for housing supplied complete in a kit form.
- Each kit corresponds to unique plot types and contains all the components necessary to fully protect each house type.
- Waste is reduced as only the exact quantity of components necessary to protect the building is supplied.
- Ordering from site is made easier as each kit corresponds to a plot type being used on site.
- Faster installation on site is achieved as the system is based on Visqueen's off site membrane prewelding techniques.





The Visqueen Housing Gas Protection System offers the complete solution to protect all dwellings from the ingress of gas. The package contains of the most appropriate gas protection membrane and dpc for site conditions and all of the accessories relevant to the protection of the various structures on-site. The Gas Membrane is factory welded into panels to cover the individual footprint of each building, offering a significant increase in speed of installation. To ensure that the gas protection membrane is of the highest integrity, each factory welded join is rigorously tested for air-tightness before delivery to site.

By working with the designer at an early stage, Visqueen Building Products can produce a complete Gas Protection Kit that is dedicated to each footprint on the development. Each Kit can then be called off by site as the development progresses. Project administration is eased as each Kit is identified by the use of a unique order reference.

The comprehensive range of gas protection products offered by Visqueen Building Products means that the most cost effective solution for each development can always be supplied:

- **Visqueen Gas Barrier**
- **Visqueen Radon Membrane**
- **Visqueen CO2 Membrane**
- **Visqueen GX Geomembrane**
- **Gas Resistant DPCs**
- **Visqueen GR DPC**
- **Visqueen Zedex High Performance DPC**

Additional Components

- **Visqueen Jointing Tapes**
- **Visqueen Top Hat Units**
- **Visqueen Preformed Corners**
- **Visqueen Radon Sump Units**
- **Visqueen Gas Venting System**

Visqueen Building Products comprehensive technical and sales support service will assist your team in creating individual Housing Gas Protection Kits for your plot types and through our nationwide distribution network to ensure that Kits are supplied in full, to site, as your development progresses.