Securifor 358 High Security System

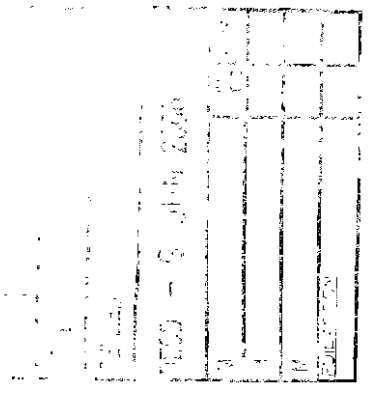

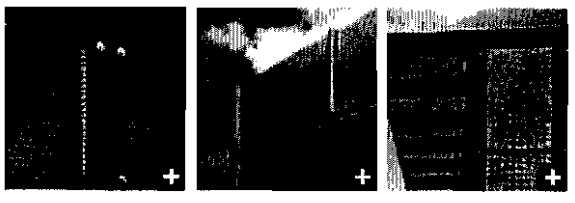

Securifor 358 is world renouned for its performance as an anti-climb & anti-cut through barrier, whilst providing the lowest level of visual impact to the surroundings. Designed to give attractive, long lasting and secure perimeter protection for retail,industrial and commercial properties, schools, public utilities and is ideally suited for electronic alarm and detection systems - no blind spots for CCTV. Military, airports, secure units and prisons.

Applications

- airports
- commercial sites
- factories & warehouses
- hospitals
- military sites
- parking places
- penitentiaries
- ports
- railway stations
- railways
- sportstadia

System assembly table

Fence Height (m)	3	3,6
	Posts	
Select:		
	Bekasecure®	Securifor® Rectangular posts
Height (m)	3,8	4,45
Profile width (mm)	140	140
Profile height (mm)	115	115
Profile thickness (mm)	3	3

Installation manual Professional network

Panel 1

Benefits

Secure and discreet
The ultimate system for providing a high degree of security where a discreet visual impact on the immediate environment is essential.

Vandal resistant
Small mesh aperture combined with 4mm wire diameter provides a substantial barrier that is difficult to climb and penetrate.Wide range of applications for high security fences to BS1722 PART 14 - CATEGORY:3

Formidable
An effective deterrent to intruders available in height up to 3.6m - specially designed for high security applications.

Durable
Low maintenance and long life resulting from high quality coating.

Complete system
Supplied as a complete system with panels, posts toppings entanglements and gates - stepped panels available to suit sloping sites.

Panel
Manufactured from hard drawn wire and electro-resistance welded at every intersection.

Mesh Pattern: 76.2mm (3") x 12.7mm (0.5") resistance welded at each intersection
Horizontal Wires: 4mm diameter at 12.7mm centres
Vertical Wires: 4mm diameter at 76.2mm centres
Presentation: Overlapped 75mm minimum at each post for securing with slotted clamp bars and M8 diameter bolts
Weld strength:
- 75% of the minimum tensile strength of the wire
- Tensile range 540-690 N/m2

Recommended Post System
Box Section RHS Posts :
- Post section dependent upon fence height
- Pitched at 2.44m Crs.
Utilise 25 x 5mm continuous flat clamp bars and blind headed bolts to secure the overlapped panels to the front face of the posts.

Coating technique
Panels made out of galvanised wires (min. 40 g/m2). An adhesion coating is given for a perfect adhesion with the polyester coating (min. 100 micron).
The posts are polyester powder coated with a galvanised substrate in accordance with Euro norm 10147 (min. 60 micron).

Finish
Colour coated in a range of 8 standard colours with a galvanise substrate. Also available Bezinal or hot dipped galvanised

Posts

Bekasecure®
Securifor® Rectangular posts

© 2006, Betafence

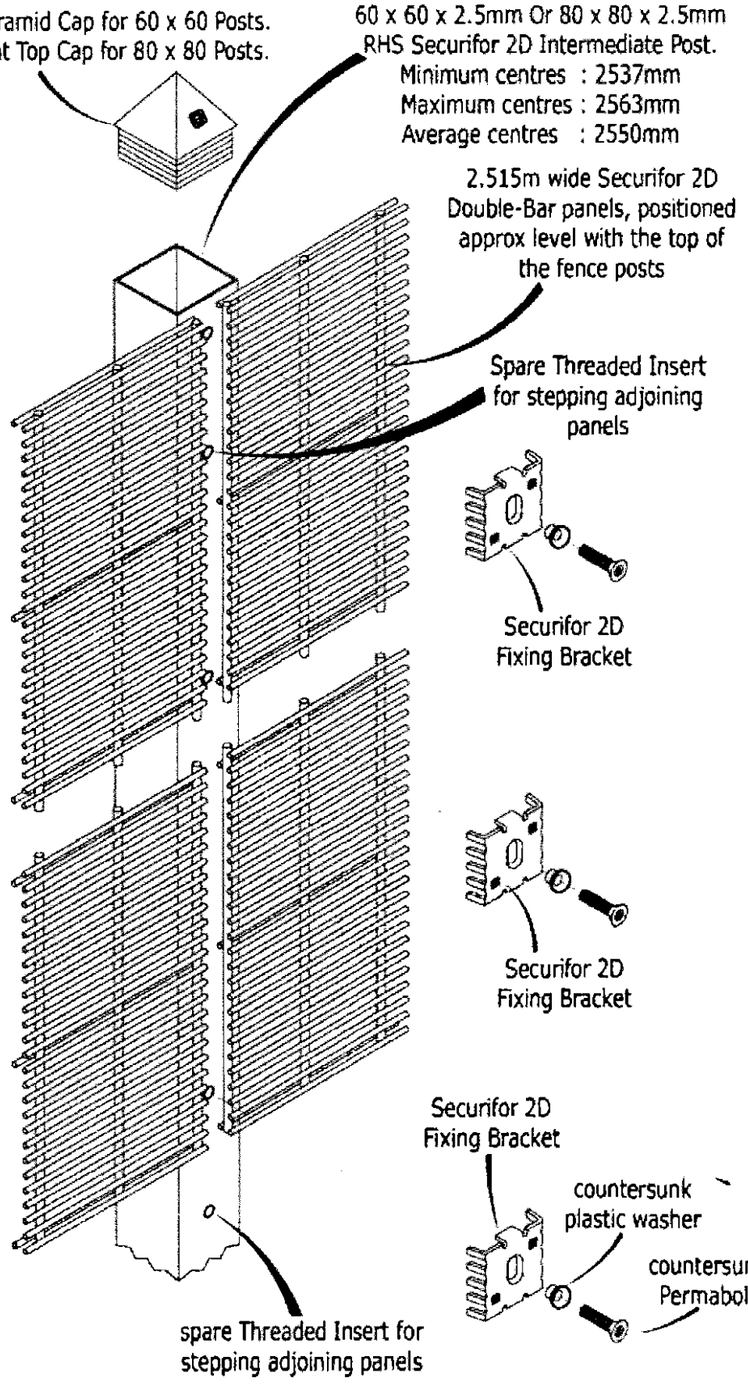

TYPICAL POST AND PANEL FIXING DETAIL

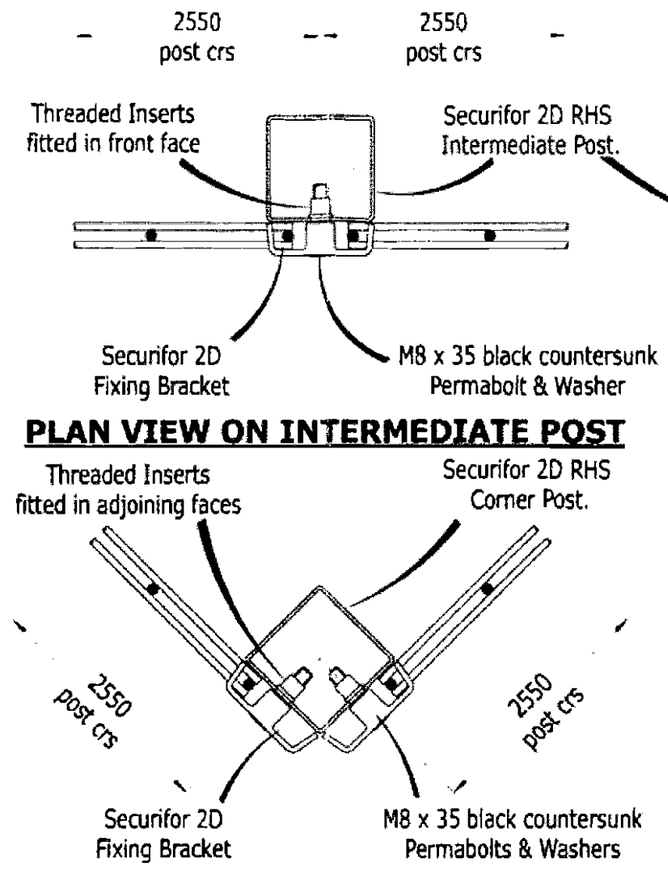

PLAN VIEW ON INTERMEDIATE POST

PLAN VIEW ON 90° CORNER POST

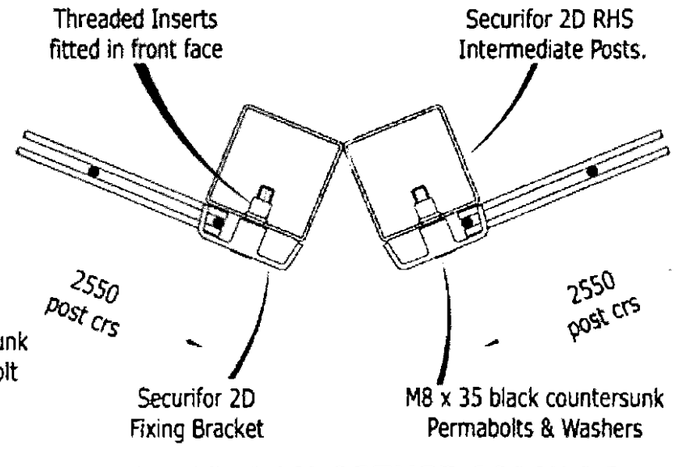

PLAN VIEW ON OBTUSE CORNERS

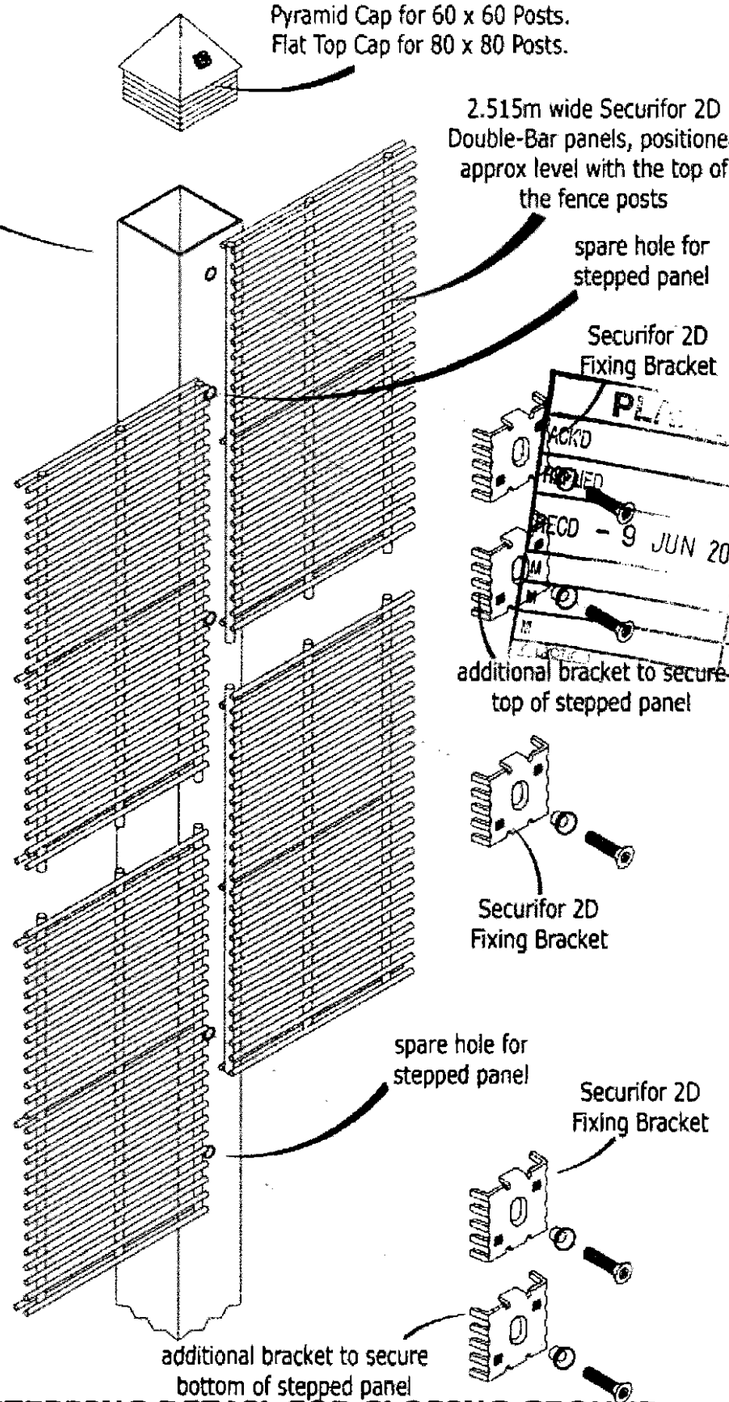

STEPPING DETAIL FOR SLOPING GROUND

BETAFENCE

Betafence Limited
Woodhouse Lane
Wigan WN6 7NS
Phone 0870 120 3252
Fax 0870 120 3242

sales.sheffield@betafence.com

www.betafence.com

SECURIFOR 2D

Drawn	Date	Drawing No :	REV
MJH	20.10.04	SEC - 2D	

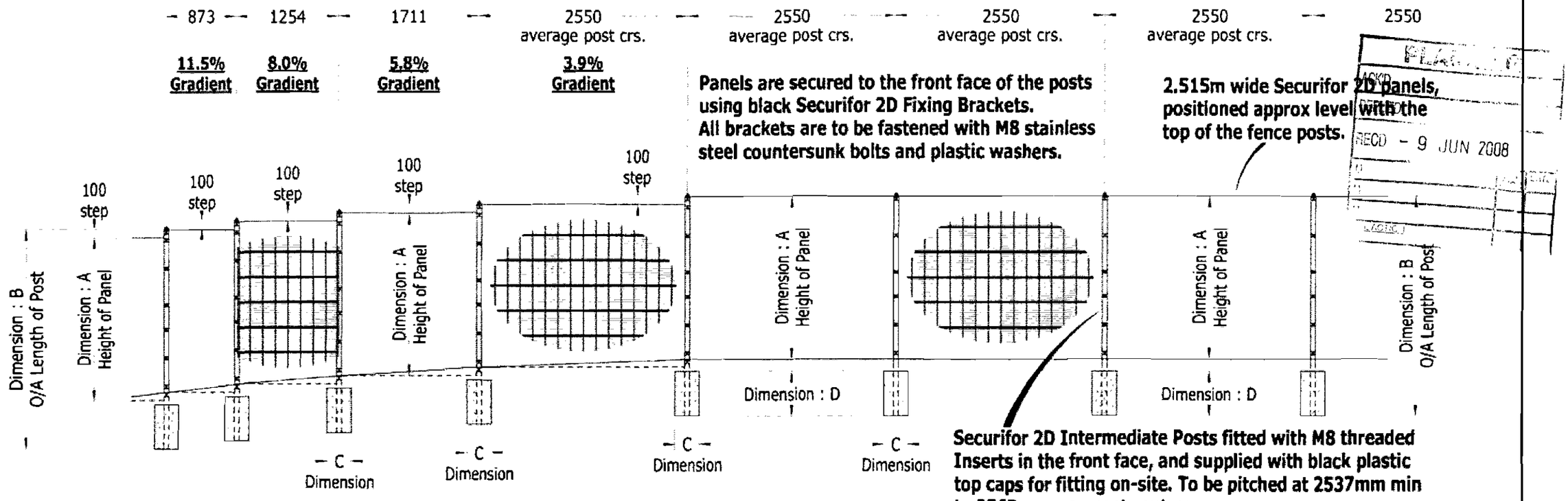

RECD - 9 JUN 2008

Corner posts
Corner posts are available for Standard 90° external and internal corners. Obtuse corners are achieved using 2no. intermediate posts cast into the same foundation, positioned at the required angle. End posts are not required.

Gradients
All standard Intermediate & Corner posts are fitted with 2no. additional threaded inserts at the top & bottom to facilitate 100mm steps between adjoining panels. Different gradients are achieved by reducing the post centres and width of panel to suit, ie :

2515 wide standard panel with 100mm step : 1 in 25.5 (3.9%) (2.25°)
1676 wide site-cut panel with 100mm step : 1 in 17.1 (5.8%) (3.35°)
1219 wide site-cut panel with 100mm step : 1 in 12.5 (8.0%) (4.55°)
838 wide site-cut panel with 100mm step : 1 in 8.7 (11.5%) (6.53°)

Steeper slopes will require made-to-order extra long posts, manufactured with additional threaded inserts to suit the stepping required between adjoining panels to suit each gradient.

Notes
The preferred method of installation is : Post - Panel - Post - Panel, etc.
Bolts may be installed using a Power-Driver and Power-Bit if preferred.
Care must be taken to avoid over tightening of bolts.

Concrete Foundations must not be leaner by mass than 1 part cement to 10 parts 20mm nominal size graded aggregates, and must be thoroughly compacted prior to the initial set.

All Securifor 2D panels are supplied to site in a standard width of 2515mm. Panels for make-up bays are to be cut to suit on site, and made good using a Zinc Etch Primer paint, followed by a top coat of Cromadex 222 polyurethane repair paint.

Dim : A Panel Height	Post Section Size	Dim : B Length Of Post	Dim : C Size Of Found's	Dim : D Depth Of Found's	Fixings Level Ground	Fixings Sloping Ground	Fixings Corner Post
1981mm	60x60x2.5mm	2700mm	300mm	500mm	6no.	8no.	12no.
2438mm	60x60x2.5mm	3100mm	450mm	500mm	7no.	9no.	14no.
2743mm	80x80x2.5mm	3400mm	450mm	500mm	8no.	10no.	16no.
3048mm	80x80x2.5mm	3800mm	500mm	600mm	10no.	12no.	20no.

IMPORTANT NOTE :
The Foundation sizes indicated are for "normal" ground conditions only, & may require modification to suit the prevailing ground conditions on site.

The Securifor 2D fencing system generally satisfies the requirements for Category : 2 (Security) fences and Category : 3 (High Security) fences as prescribed by B.S. 1722 Part : 14 - Open Mesh Steel Panel Fences

BETAFENCE
Betafence Limited
Woodhouse Lane
Wigan WN6 7NS
Phone 0870 120 3252
Fax 0870 120 3242
sales.sheffield@betafence.com
www.betafence.com
Betafence Limited reserves the right to amend and withdraw products detailed herein, without prior notice
COPYRIGHT © 2003
BETAFENCE LIMITED - SHEFFIELD - ENGLAND

Drawn	Date	Drawing No :	REV
MJH	20.10.04	SEC 2D1	

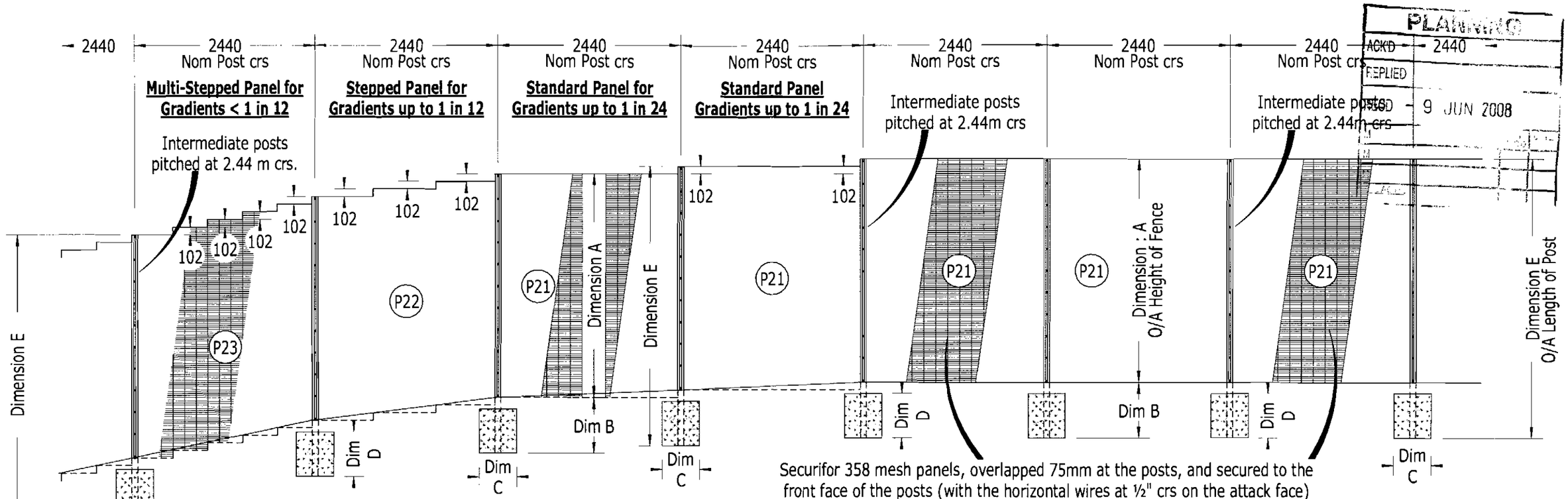

PLANNING
ACKD
REPLIED
ISSUED 9 JUN 2008

NOTE : The Securifor 358 Hi-Security system generally satisfies the requirements for Category 2 (Security) fences and Category 3 (High Security) fences as prescribed by BS 1722 Part 14 - Open Mesh Steel Panel Fences

OPTIONAL EXTRA-OVERS

For additional security, the bottom edge of the standard Securifor 358 panels maybe "staked" at finished ground level with hairpin staples (Not By Betafence Ltd). Alternatively, the panels may be extended 150mm below finished ground level for burying the bottom edge in a trench backfilled with either pea gravel or concrete.

SECURITY TOPPINGS

Fence posts may be supplied with 500mm vertical extensions to support 3 rows of Barbed Wire or Barbed Tape. When using Security Toppings, Strainer posts (with Bracing Struts + Cross Stays) are required to tension the Barbed Wire and should be provided at all Ends, Corners, Changes in Level, and at 69m intervals in straight lengths.

GRADIENTS

(P21) **RECTANGULAR PANEL** - 2515 wide x 3302mm high, for level ground and for gradients less than 1 in 24 by stepping adjoining panels 102mm max.

(P22) **STEPPED PANEL** - 2515 wide x 3505mm high, to suit all gradients from 1 in 24 to 1 in 12

(P22) **MULTI-STEPPED PANEL** - 2515 wide x height as required by stepping in increments of 102, to suit all gradients less than 1 in 12

CUTTING PANELS ON-SITE

All Securifor 358 mesh panels are supplied to site in a standard width of 2515mm. Panels for make-up bays must be cut to suit on-site in 76.2mm increments, and made good using a zinc-etch primer paint, followed by a top coat of Cromadex polyurethane repair paint.

FOUNDATIONS

The foundation sizes indicated are for "normal" ground conditions only, and may require modification to suit the prevailing ground conditions on-site.

SETTING POSTS IN CONCRETE

Concrete Mix : GEN 1 or ST2 - to BS EN 206-1 using 20mm nominal size graded aggregates

Alternative for small batch : the mix should not be leaner by mass than 1 part cement to 10 parts 20mm nom graded aggregates

All holes to be excavated neatly and with vertical sides.

All concrete should be thoroughly compacted prior to the initial set.

Dim : A Fence Height	Dim : B Depth Of Hole	Dim : C Size Of Found's	Dim : D Depth Of Concrete	Dim : E O/A Length Of Post	Recommended Section Size	Fixings	
						Inters	Corners
2.0m	700mm	300mm x 300mm	550mm	2700mm	60 x 60 x 2.5mm RHS	7no.	2 x 7no.
2.4m	700mm	400mm x 400mm	550mm	3100mm	60 x 60 x 2.5mm RHS	9no.	2 x 9no.
2.7m	700mm	450mm x 450mm	550mm	3400mm	80 x 80 x 2.5mm RHS	10no.	2 x 10no.
3.0m	750mm	500mm x 500mm	600mm	3750mm	80 x 80 x 2.5mm RHS	11no.	2 x 11no.

BETAFENCE
sales.sheffield@betafence.com
www.betafence.com
Betafence Ltd - Wigan
Woodhouse Lane
Wigan WN6 7NS
Phone 0870 120 3252
Fax 0870 120 3242

Betafence Ltd. reserves the right to amend and withdraw products detailed herein, without prior notice

COPYRIGHT © 2005
BETAFENCE LTD - SHEFFIELD - ENGLAND

SECURIFOR 358

Drawn	Date	Drawing No :	
MJH	02-11-05	SEC-358-A	REV -