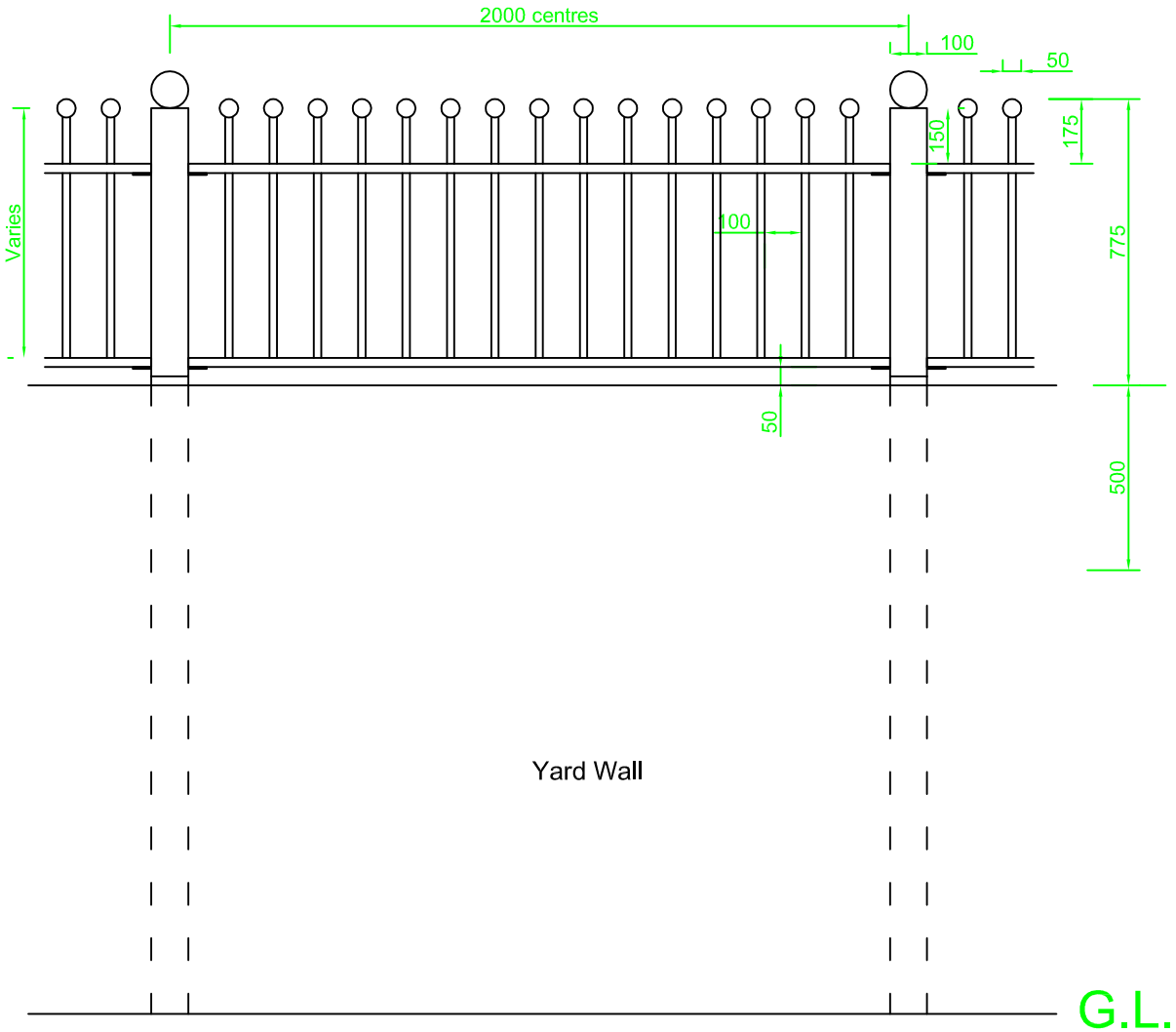


Detail 7

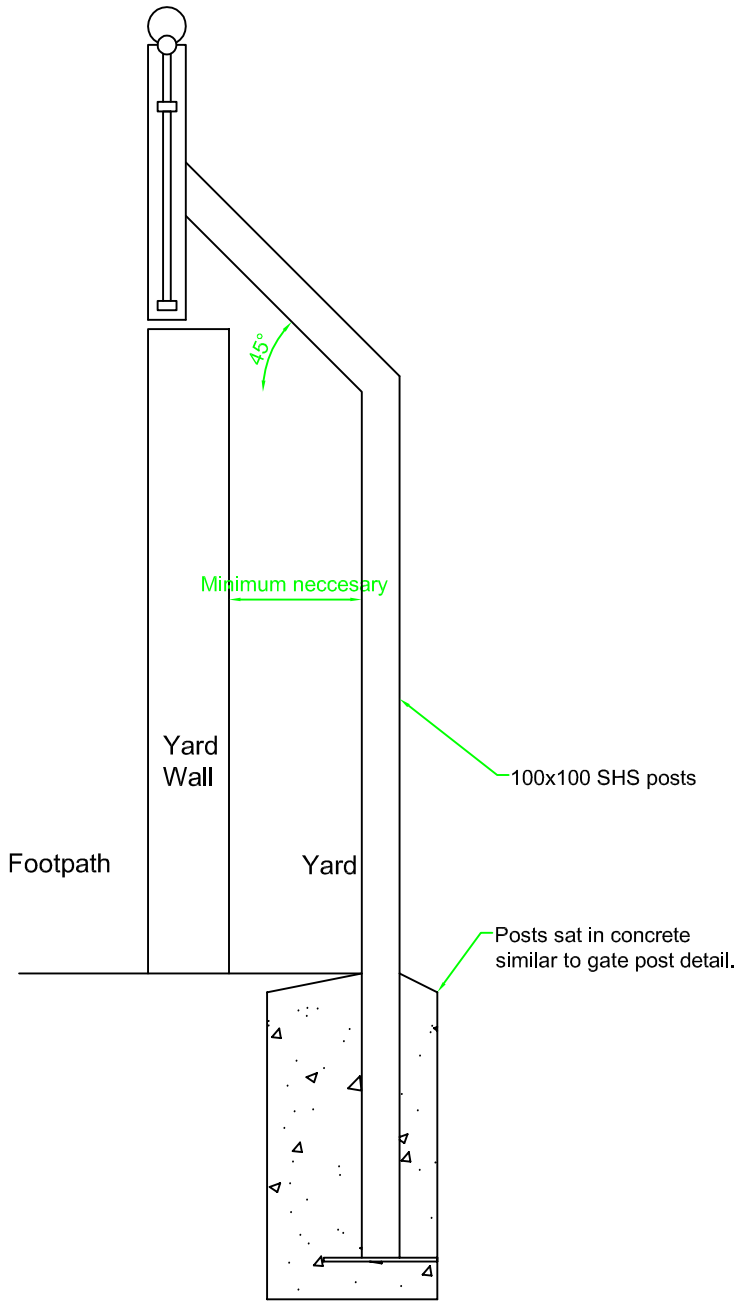


**NOTES**

1. WELDING:
All welds to be continuous seam or fillet welds. Any irregularities to be ground down prior to galvanising.

2. GALVANISING:
All fabricated steelwork to be hot-dipped galvanised to BS 1461.

All steel surface shall be free of any slag, spatter or grease.

3. PAINTING:
All galvanised surfaces to be degreased using Dacrylate Thinner 'R5'. The material shall then be treated with Dacrylate Mordant Solution (T Wash) and then painted without delay with the following system:

Dacrylate Vinadac HB MIO, ref: 41-line, to an approximate wet film thickness of 190 microns to achieve a dry film thickness of 75 microns
(Colour: 41-177 (Matt Black)).

4. The Contractor should satisfy himself to the accuracy of all measurements shown in relation to existing features.

Fence panels attached to posts by welded bracket security bolted through to matching bracket welded to SHS posts.

Detail 5

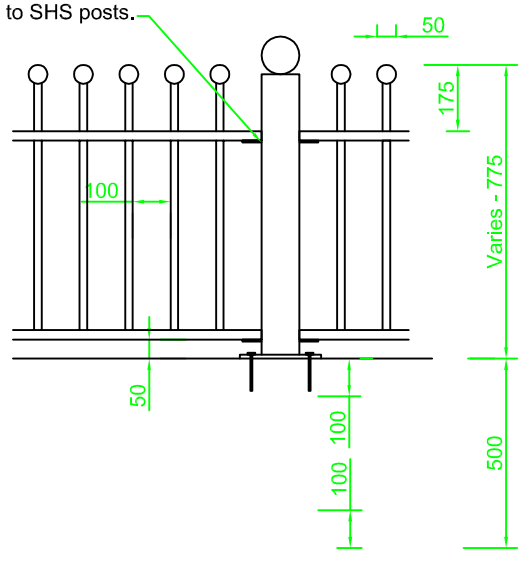


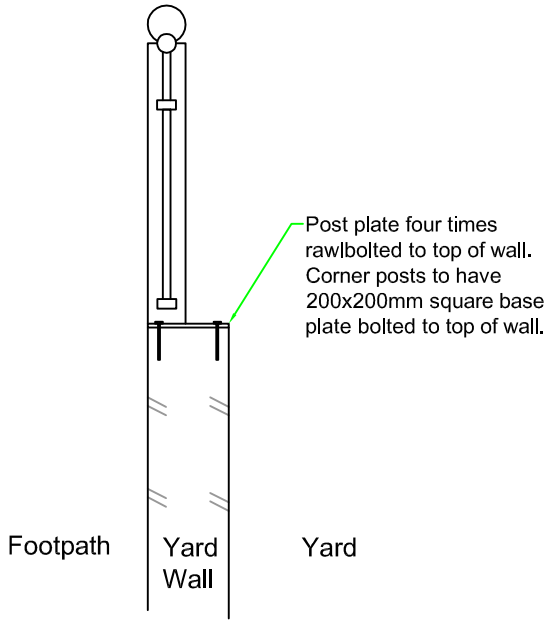


Detail 6

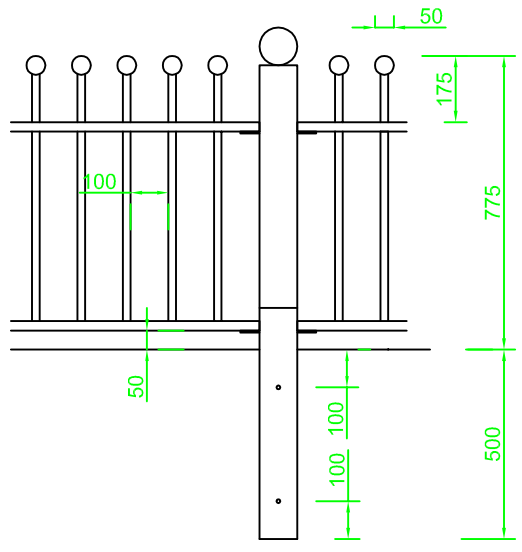


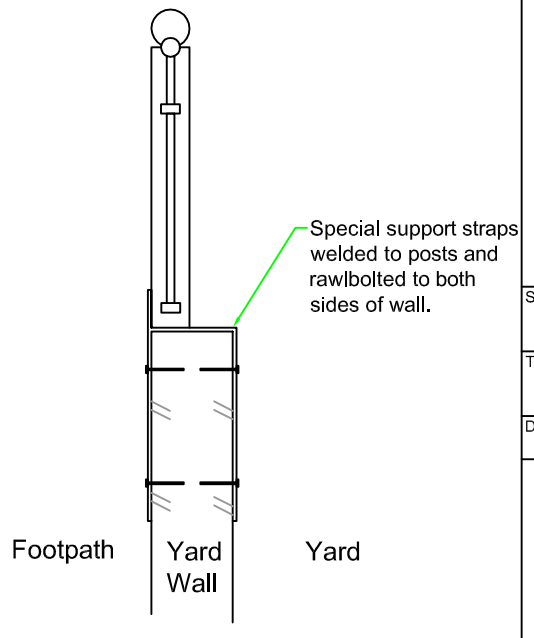


SITE:
Alleyway Security Contracts

TITLE:
Fence Above Wall

| DWG No. | SCALE: | DATE: |
|---|---|---|
| HTS / AS / 01 / 4 | 1:10 | 03 Nov. 2003 |

Manchester Housing Tech Services
Parkside Office
Sheepfoot Lane
Prestwich
Manchester
M25 0BW
Tel: 0161 740 0289
Fax: 0161 720 7211