FläktWoods

AIR HANDLING UNIT EC

Project	Q32380A00 (5650) / Tootle House				
Unit	1 (1) / AHU 1				2008-02-20
Size	07				Page 4
Customer					
Customers ref.					
Our ref.	Craig Weedall				
Supply air flow	4.10	m³/sec	Exhaust air flow	4.10	m³/sec
Ext. static pressure	300	Pa	Ext. static pressure	300	Pa
Voltage	3 x 400 V, 50	Hz	Weight	1352	kg
SFP_v	2.5	kW/m³/s			

SUMMARY

Functional sections in direction of air flow	**v0 (m/s)**	**Et (%)**	**tw (°C)**	**ts (°C)**	**dP (Pa)**
Supply air:					
Connection section	3.3				279
Heat exchanger	4.2	71.2	-4.0 / 15.9		204
Inspection section					0
Air heater	3.1		15.9 / 18.0		22
Centrifugal fan		72.6	16.9 / 18.0	28.0 / 29.2	847
Exhaust air:					
Connection section	3.2				143
Heat exchanger	4.3		24.0 / 6.5		199
Centrifugal fan		69.7			732

SOUND POWER LEVELS

(standard: prEN13053 ISO/CD 13347-2)

	Lw per octave band (dB)								**LwA**
Octave band (Hz)	**63**	**125**	**250**	**500**	**1k**	**2k**	**4k**	**8k**	**dB(A)**
Fresh air connection	75	77	74	78	74	68	62	36	79
Supply air connection	82	90	86	88	91	90	84	78	95
Extract connection	77	79	79	83	79	75	66	51	84
Exhaust connection	82	90	86	88	91	90	84	78	95
To surroundings	75	80	70	65	64	63	54	46	70

TECHNICAL SPECIFICATION
(components listed in direction of air flow)

Installation instructions — ECAZ-36-03
Language : English

SUPPLY AIR

Intake air section damper/filter — ECVA-07-10-1-1-1-27-1-1
Damper type: internal damper CEN 3
Bag filter: long, filter class F7, glass fibre
Pre-filter for long bag filter: filter class G3
Material: galvanized sheet steel

Number of filters	4*792x392	
Pressure drop, start	194	Pa
Pressure drop, dimensioning	279	Pa
Pressure drop, end	364	Pa
Pressure drop damper	10	Pa
Pressure drop filter	161	Pa
Pressure drop prefilter	107	Pa
Face area	1.3	m²
Face velocity	3.3	m/s
Differential manometer, sloping scale	**ECAZ-25**	
Duct connection piece	**ECAZ-18-07-1-2**	

Location: inlet (ECVA, ECRF, ECSA) alt. on outlet (ECRF, ECSA, ECLK)
Connection type: Flange connection, galvanized sheet steel

(REGOTERM) Rotary heat exchanger — ECRA-07-10-1-5-1
Rotor type: non-hygroscopic
Drive equipment, power supply at 50 Hz: variable speed, 230 V, single phase
Material: galvanized sheet steel

	Winter	
Temperature Efficiency	71.2	%
Capacity reduction	134.0	kW
Humidity efficiency	40.8	%
Supply air	**Winter**	
Pressure drop	180	Pa
Air temperature	-4.0 / 15.9	°C
Wet temperature	-4.0 / 10.4	°C wb
Exhaust air	**Winter**	
Pressure drop	190	Pa
Air temperature	24.0 / 6.5	°C
Wet temperature	17.5 / 6.5	°C wb
Additional throttling	48	Pa

Inspection section — ECTC-07-10-2-1
Length / Version: 200 mm
Version: with inspection door

FläktWoods

AIR HANDLING UNIT EC

Project	Q32380A00 (5650) / Tootle House	
Unit	1 (1) / AHU 1	2008-02-20
Size	07	Page 6

Air heater for hot water — ECEE-07-10-1-1-2-1

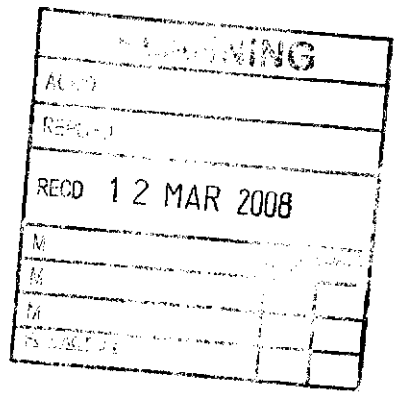

Output variant: 1		
Finned coil materials: Cu/Al		
Version: air heater		
Material: galvanized sheet steel		
Nom. pipe size	32	
Pressure drop, dimensioning	22	Pa
Output	10.4	kW
Air temperature	15.9 / 18.0	°C
Control principle for water heater	flow control	
Water temperature	82.0 / 71.0	°C
Water flow	0.23	l/s
Water velocity	0.2	m/s
Pressure drop water	0.2	kPa

Fan with B impeller — ECLB-07-10-1-1-7-0-1

Fan variant: Impeller type B, CENTRIMASTER		
Speed	2061	rpm
Max speed	2500	rpm
Fan efficiency	72.6	%
Total efficiency	60.9	%
Pressure rise, dimensioning	847	Pa
Fan shaft power at dim. data	4.9	kW
Grid Power	5.9	kW
Temperature rise	1.2	°C
SFP Calculation		
Specific fan power	1.29	kW/m³/s
Grid power according to SFP	5.3	kW
Pressure rise	779	Pa
Speed	1970	rpm
Single-speed motor	**APAL-4-00750-2-0-2**	
Voltage: 380-420 V delta, 660-690 V star		
Design variant: WEG		
Efficiency	88.6	%
Speed	1470	rpm
Motor output	7.5	kW
Electric current	14.2	A
Number of Poles	4	
Belt drive for fan with B impeller	**ECLT-07-1-1-2061-1**	
Fan variant: for V-belt drive		
Fan speed, r/min: 2061		
Operating frequency at max air flow: 50 Hz		
Efficiency	94.8	%
Grille door for one fan unit	**ECAZ-31-07-1-1**	
Fan variant: belt driven		
Material : galvanized sheet steel		
Duct connection piece	**ECAZ-18-07-2-2**	
Location: fan outlet (ECL(B,F)		
Connection type: Flange connection, galvanized sheet steel		

EXHAUST AIR

Intake air section damper/filter ECVA-07-10-1-2-1-15-0-1

Damper type: internal damper CEN 3
Bag filter: long, filter class F5, synthetic
Material: galvanized sheet steel

Number of filters	4*792x392	
Pressure drop, start	93	Pa
Pressure drop, dimensioning	143	Pa
Pressure drop, end	193	Pa
Pressure drop damper	10	Pa
Pressure drop filter	133	Pa
Face area	1.3	m²
Face velocity	3.2	m/s
Differential manometer, sloping scale	**ECAZ-25**	
Duct connection piece	**ECAZ-18-07-1-2**	

Location: inlet (ECVA, ECRF, ECSA) alt. on outlet (ECRF, ECSA, ECLK)
Connection type: Flange connection, galvanized sheet steel

Fan with B impeller — ECLB-07-10-1-2-7-0-1



Fan variant: Impeller type B, CENTRIMASTER		
Speed	1990	rpm
Max speed	2500	rpm
Fan efficiency	69.7	%
Total efficiency	58.4	%
Pressure rise, dimensioning	732	Pa
Fan shaft power at dim. data	4.4	kW
Grid Power	5.3	kW
Temperature rise	1.0	°C
SFP Calculation		
Specific fan power	1.21	kW/m³/s
Grid power according to SFP	4.9	kW
Pressure rise	676	Pa
Speed	1935	rpm
Single-speed motor	**APAL-4-00550-2-0-2**	
Voltage: 380-420 V delta, 660-690 V star		
Design variant: WEG		
Efficiency	88.5	%
Speed	1450	rpm
Motor output	5.5	kW
Electric current	10.6	A
Number of Poles	4	
Belt drive for fan with B impeller	**ECLT-07-1-2-1990-1**	
Fan variant: for V-belt drive		
Fan speed, r/min: 1990		
Operating frequency at max air flow: 50 Hz		
Efficiency	94.7	%
Grille door for one fan unit	**ECAZ-31-07-1-1**	
Fan variant: belt driven		
Material : galvanized sheet steel		
Duct connection piece	**ECAZ-18-07-2-2**	
Location: fan outlet (ECL(B,F)		
Connection type: Flange connection, galvanized sheet steel		

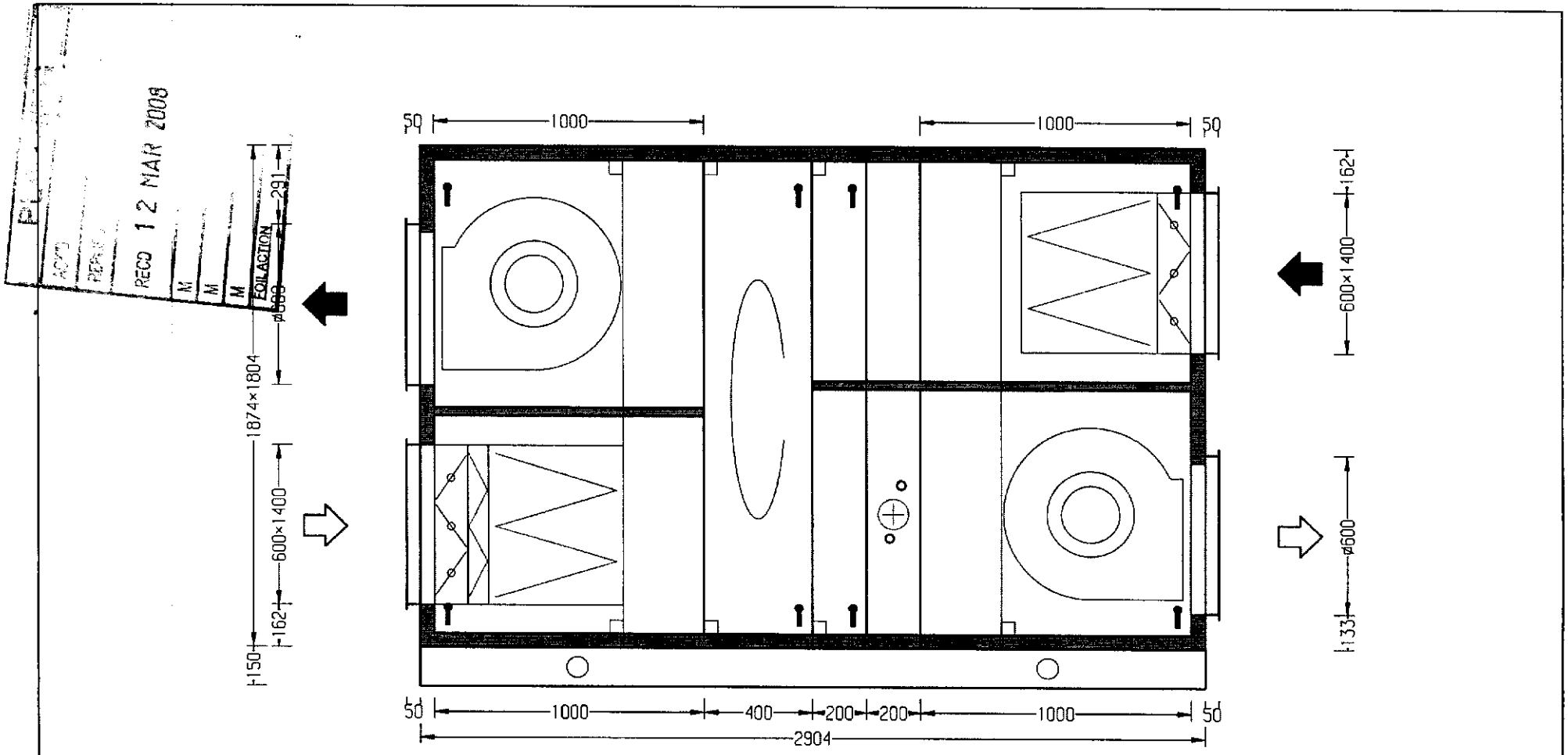

From Inspection Side

2008-02-20

Project		Q32380A00 (5650) / Tootle House
Unit		1 (1) / AHU 1
Supply air	EC-07	4.10 m³/sec
Exhaust air	EC-07	4.10 m³/sec

FläktWoods

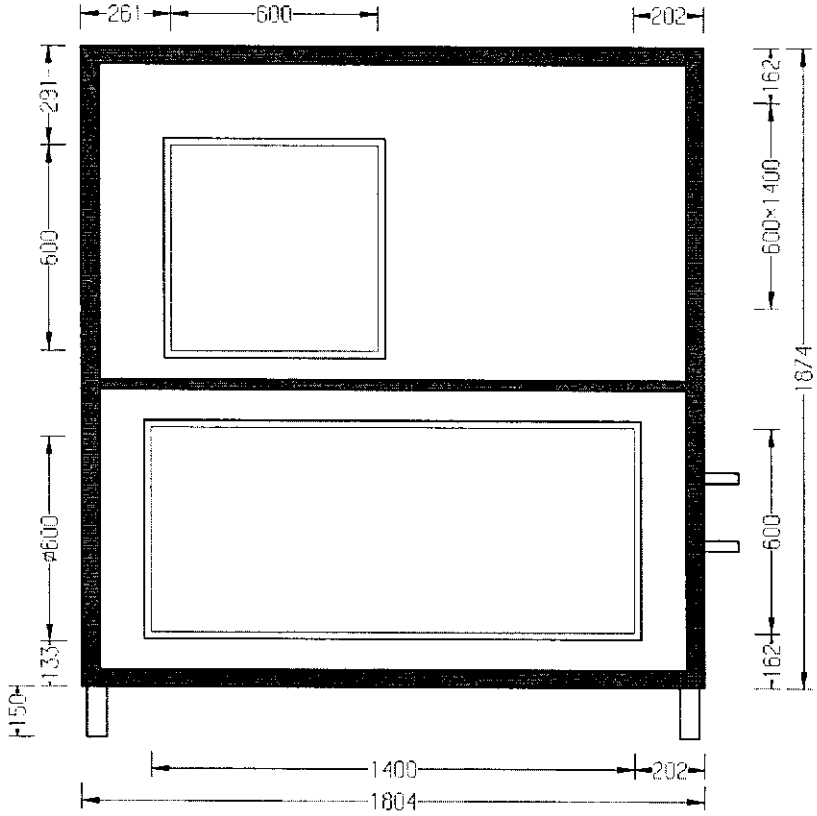

From Left Hand Side

2008-02-20

Project		Q32380A00 (5650) / Tootle House
Unit		1 (1) / AHU 1
Supply air	EC-07	4.10 m³/sec
Exhaust air	EC-07	4.10 m³/sec

FläktWoods

RECD 12 MAR 2008

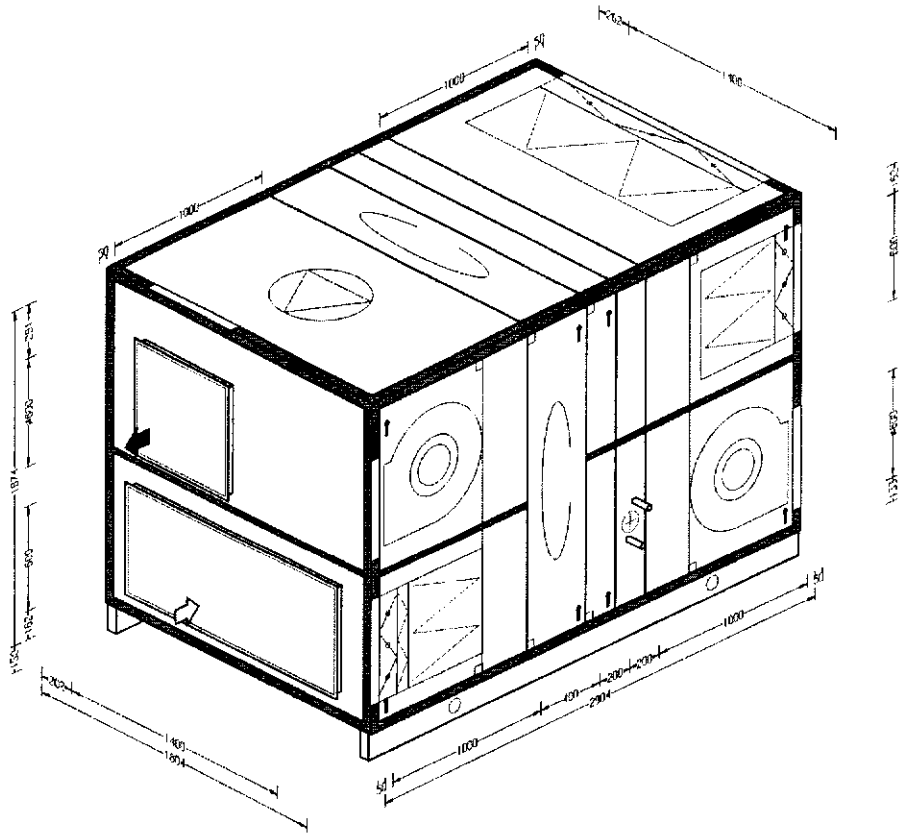

Isometric South West

2008-02-20

Project		Q32380A00 (5650) / Tootle House
Unit		1 (1) / AHU 1
Supply air	EC-07	4.10 m³/sec
Exhaust air	EC-07	4.10 m³/sec

FläktWoods