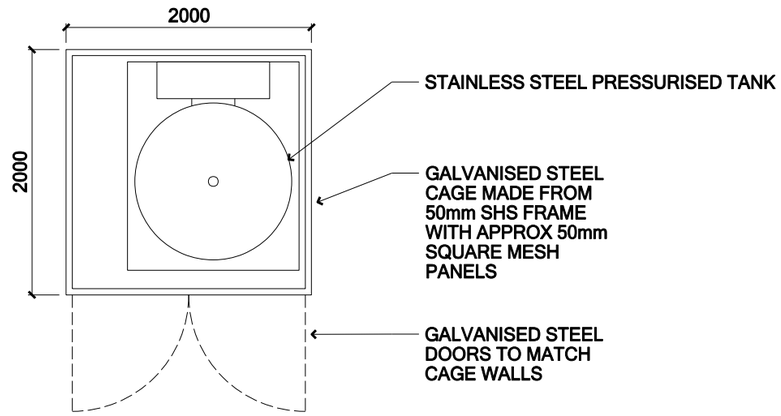

PLAN VIEW

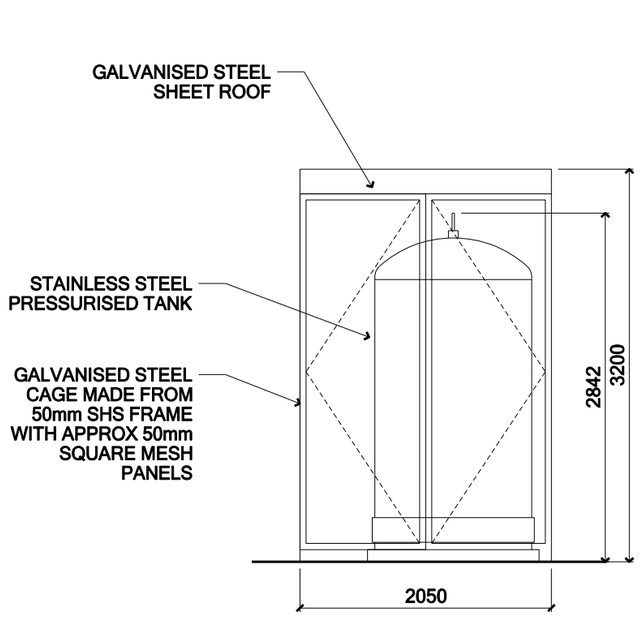

FRONT ELEVATION

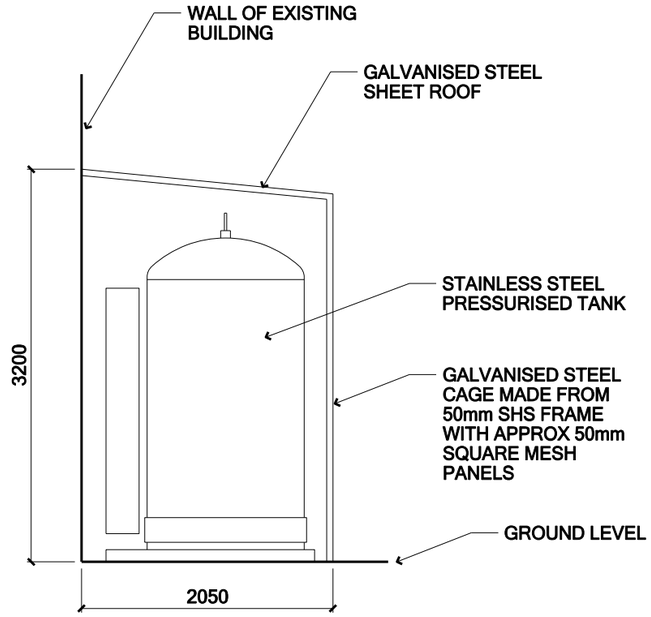

SIDE ELEVATION

All dimensions to be as noted. Do not scale from this drawing. Report any discrepancies to the Architect / CA immediately. All Areas are approximate and use of these Areas for commercial purposes should include due allowance for variations inherent in design development and building processes. This drawing is the copyright and property of Hurd Rolland Partnership and must not be reproduced without prior written permission.

Rev	Description	By	Chk	Date
A	Initial issue	GA	GA	27/06/13

0m 1m 2m

Scale bar

Nanoco Technologies Ltd.

Nanoco Laboratory

UMIC Core Technologies Facility

Details of tank and cage

Drawn: GA	Checked: GA	Approved: IG
Scale: 1:50@A3	Date: 25.06.2013	Project No: M1602
Drawing No: P(53)01		Revision: A

ISSUED FOR PLANNING

hurd rolland
Chartered Architects
7th Floor, 44 Peter Street
Manchester
Tel: 0161 832 5322
Fax: 0161 832 5245