REAR OF MANAGEMENT SUITE NORTH CITY SHOPPING CENTRE

SCALE HALF CM = 1 FOOT

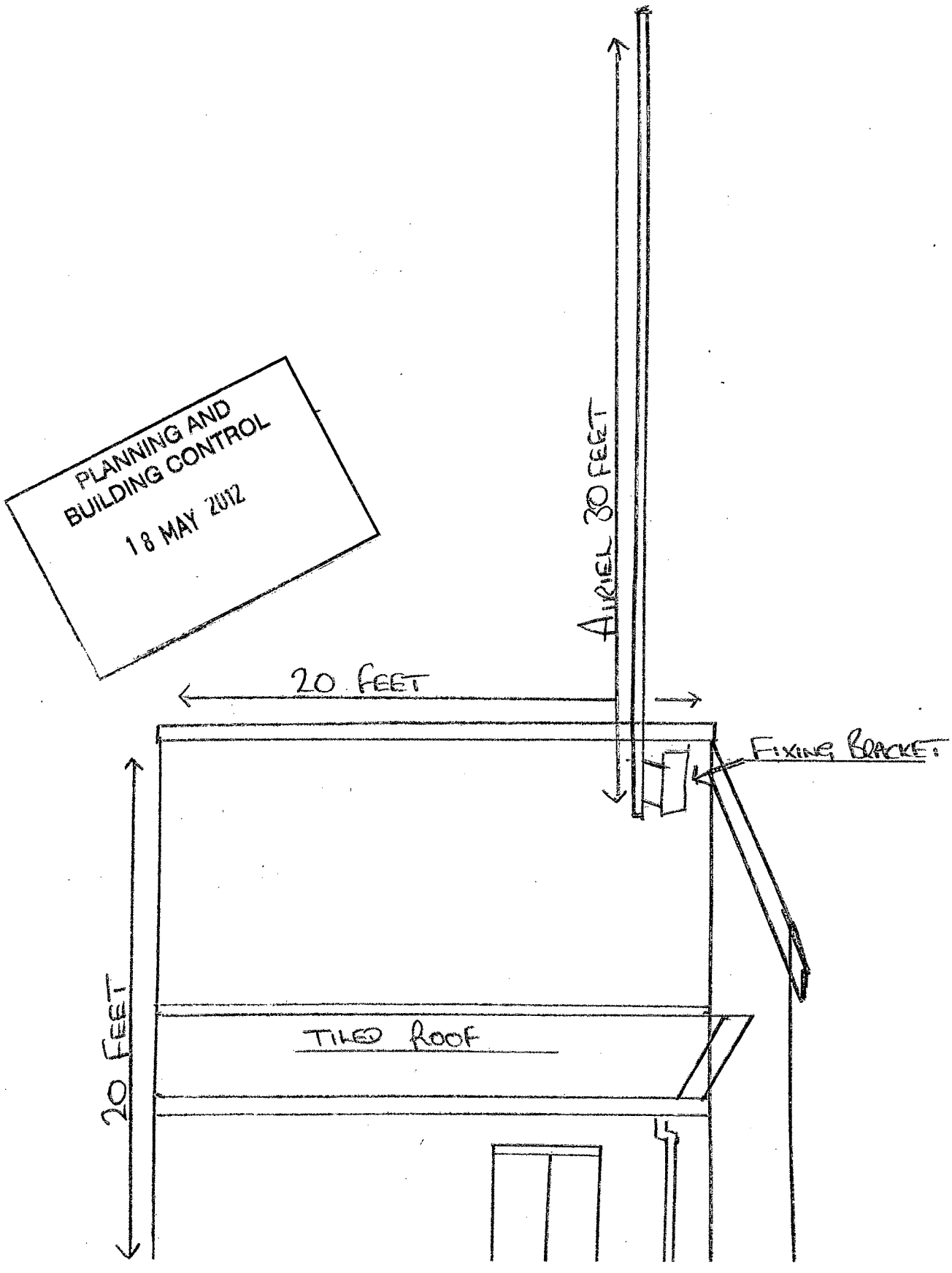

Rear of Management Suite North City Shopping Centre

1 cm = 1 meter Scale

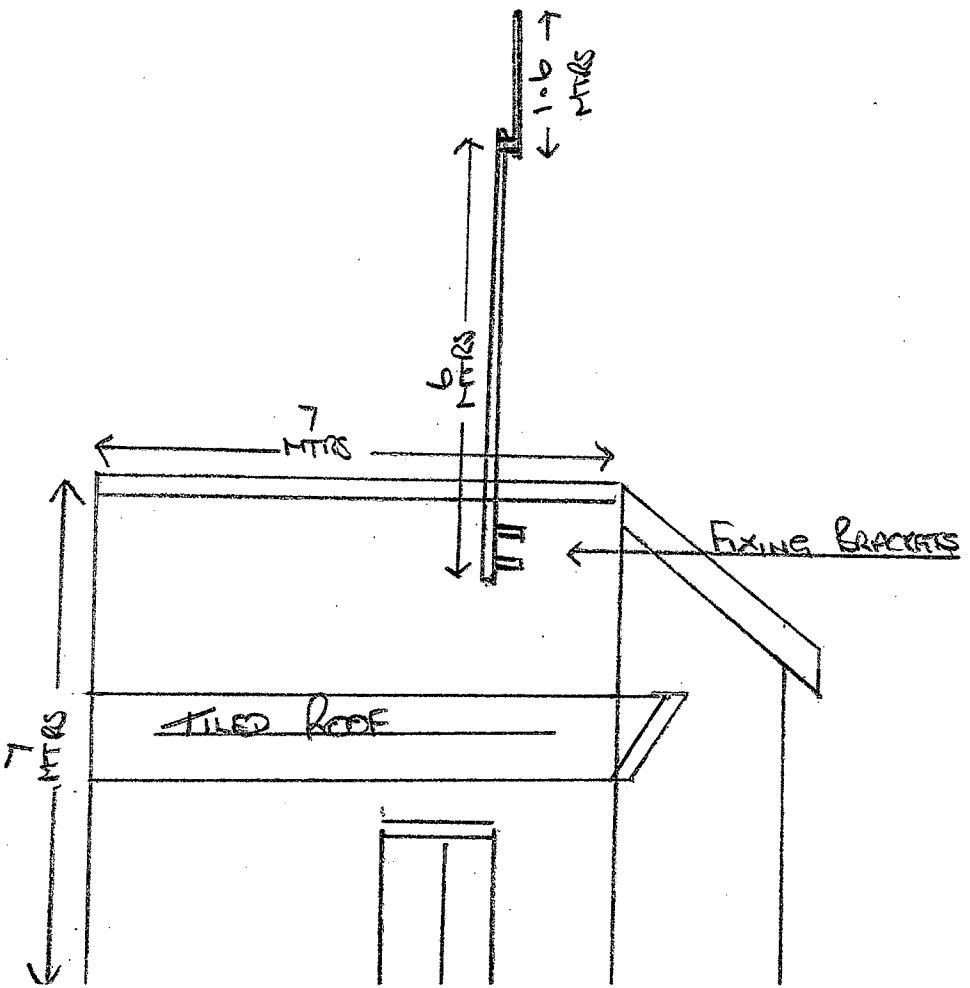

PLANNING AND BUILDING CONTROL
25 MAY 2002

Bandwidth	

ORDERING INFORMATION	
Frequency	*Type*
136-145 MHz	2260
145 - 156 MHz	2261
156 - 166 MHz	2262
166 - 175 MHz	2263
420 - 440 MHz	2265
440 - 470 MHz	2266

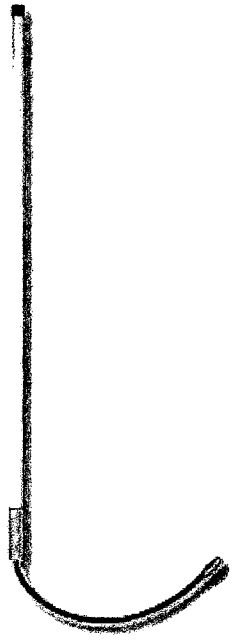

PLANNING AND
BUILDING CONTROL

25 MAY 2012

Kind Regards,

Mark Gallon

Digitall Communications

PLANNING AND
BUILDING CONTROL
04 MAY 2012

