Typical Long Section Drive / Shared Drive

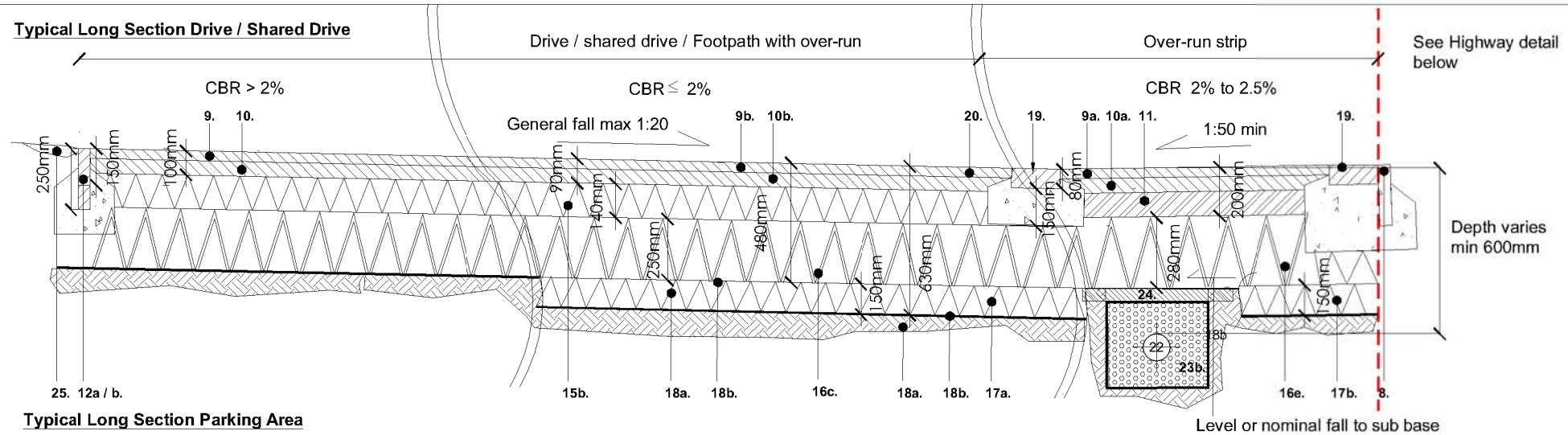



Notes
1) Figured dimensions to be taken. Do not scale dimensions. Contractors must verify all dimensions on site before preparing shop drawings or commencing any work.
2) Copyright © This drawing must not be reproduced without the permission of The Groundwork Trust
3) Reproduced from Ordnance Survey mapping with permission of the controller of HMSO.

© Crown copyright. Unauthorised reproduction infringes Crown copyright and may lead to prosecution or civil proceedings.

Typical Long Section Parking Area

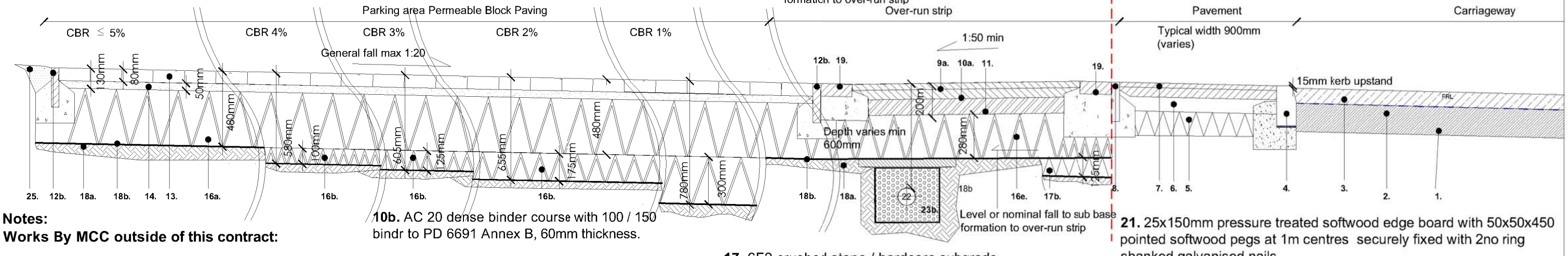

Notes:
Works By MCC outside of this contract:

1. Existing Concrete / HRA / DBM road treated to MCC recommendations.

2. Geogrid laid as to MCC recommendations.

3. DBM binder and wearing course to MCC details.

4. New HB2 PCC kerb and hauch to MCC details.

5. Pavement sub base constructed to MCC details.

6. Pavement road base constructed to MCC details.

7. HRA surfacing to pavement with rolled in (red) chippings to MCC details.

8. 250 x 50mm PCC edging kerb with 100mm bed and haunch (or to MCC details where to rear of highways)

Works to DRIVEWAYS & OVER-RUN STRIPS included in this contract:

9a. HRA 30 / 14 surface course with 40 / 60 grade binder to PD 6691 Annex C, 40mm thickness.

9b. AC 10 close surface course with 100 / 150 binder to PD 6691 Annex B 30mm thickness.

10a. AC 20 dense binder course with 40 / 60 grade binder to PD 6691 Annex C, 60mm thickness.

10b. AC 20 dense binder course with 100 / 150 bindr to PD 6691 Annex B, 60mm thickness.

11. AC 32 base course with 40 / 60 grade binder to PD 6691 Annex B, 100mm thickness.

12a. 150 x 50mm PCC edging kerb with 150mm GEN / ST2 bed and haunch to restrain tarmac.
12b. 250 x 50mm PCC edging kerb with 100mm GEN1 / ST2 bed and haunch to restrain blockwork.

13. Tobermore Hydropave pedesta, 240 x 120 x 80mm concrete block paving unit, units laid in a herringbone pattern. Colour - brindle. To be plate vibrated after laying and before joint filling. 6.3-2mm grit to be brushed into unit joints to completly fill joints.

14. Bedding layer - 50mm 6.3-2mm bedding grit.

15. Type 1 granular material rolled and compacted by 6t deadweight roller or vibrating roller equivalent:
15a. depth 240mm (where non-porous)
15b. depth 140mm (where over aid over porous sub base)

16. Porous sub base - 4/ 20mm well compacted permeable aggregate to BS13242:2002:
16a. depth 350mm (perm blockwork CBR ≥5%)
16b. adjustment to pavement design for low CBR:
CBR 1% = +300mm
CBR 2% = +175mm
CBR 3% = +125mm
CBR 4% = +100mm
16c. depth 250mm (under impermeable drive)
16d. depth 75mm under gravel
16e. depth 280mm (under over-run strips)

17. 6F2 crushed stone / hardcore subgrade improvement layer where low CBR:
17a. Driveways (bitmac non-porous)
CBR ≤ 2% = 150mm
CBR > 2% = non
17b. Under over-run strips
CBR < 2% = 250mm
CBR 2.0 - 2.5% = 150mm
CBR 2.5 - 3.0% = 100mm
CBR >3.0% = non

18a. Formation to be loosened to assist infiltration.

18b. Geotextile separation (300mm overlaps at all joints):Terram 500 or Polyfelt TS40or similar non woven geotextile, min 2100N CBR puncture resistance / 12.5N tensile strength.

18c. Geotextile filtration (300mm overlaps at all joints to fully wrap filter drains): Terram 1000 or Polyfelt TS20 or similar non woven geotextile, min 1500N CBR puncture resistance / 8N tensile strength.

19. Rigid trims to over-run strips 200 x 100 x 80mm Tobermore pedesta concrete block paving (brindle) unit laid soilder (header) course on 150mm concrete bed / 100mm haunch GEN 1 / ST2.

21. 25x150mm pressure treated softwood edge board with 50x50x450 pointed softwood pegs at 1m centres securely fixed with 2no ring shanked galvanised nails

22. Twin walled rib perforated pipe with solid invert and fittings to meet BS 44962 1999 to contractors proposals 100mm diameter designed to a nominal fall of 1:100

23a. Filter drain (no pipe)
23b. Filter drain (below ground piped)

filled with Granular material conforming to BS EN 1610. Material size : 10mm nominal single size or 14 to 5mm graded or

24. 600x600x63mm Fibre reinforced PCC flag paving units spaced at 50mm gaps to protect pipework.

25. Grass edge - reinstate using suitable retained top soil. Settled depth of top soil to grassed area 15mm above paving, ensuring no trips are formed and concrete haunch adequatley covered.

No.	Description	Date	Chkd	Appd
F	Dimensions added for clarity		AP	PH
E	Porous sub base depth amended for low CBR		AP	PH
D	Linear drainage / Over-run strip construction amended		AP	PH
C	Linear drainage / Over-run strip construction amended		AP	PH
B	Linear drain amended		AP	PH
A	Blockwork unit size ammended		AP	PH

Southway Housing Trust

GROUNDWORK

CHANGING PLACES CHANGING LIVES

Project	Drawing Title
Southway Housing Trust Driveway Improvements	Drive& Over-run Strip Long Section

SCALE	DATE	DRAWING NO.	REV	DRAWN BY	CHECKED BY
1:25 @ A3	30.09.10	1612-021	F	AP	PH

Groundwork in Manchester, Salford, Stockport, Tameside & Trafford.
Timber Wharf, 42-50 Worsley Street, Castle fields Manchester, M15 4LD Tel: 0161 220 1000

Porous Drive and Parking Bay Gravel Soaker

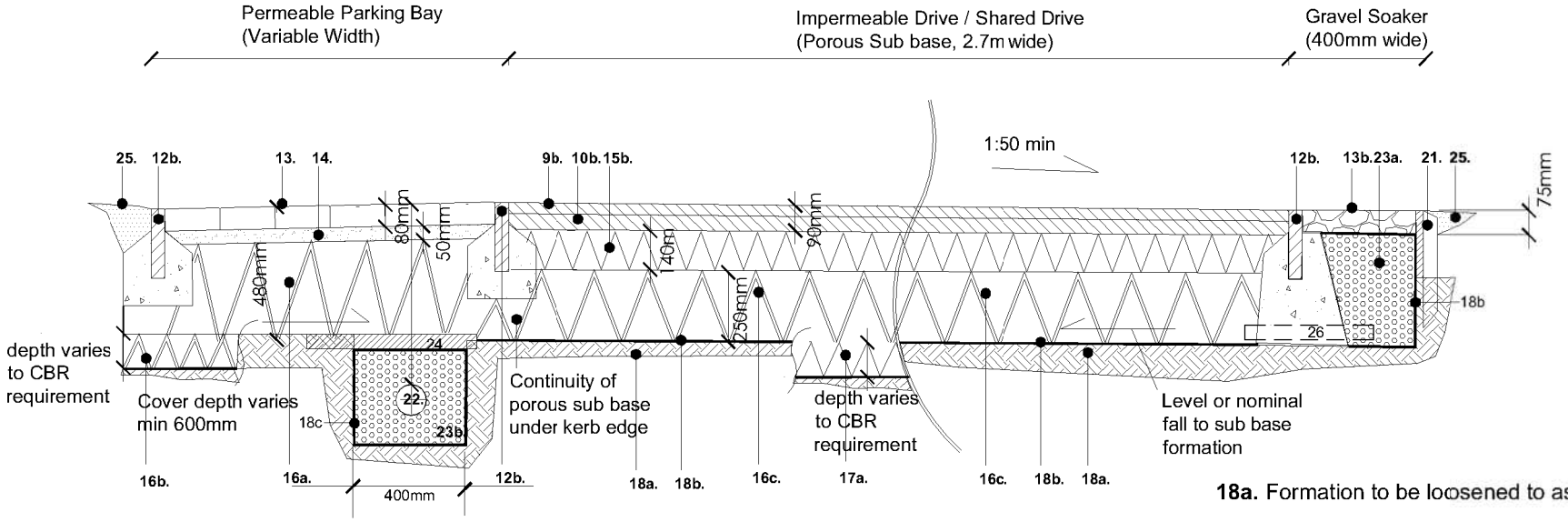

Porous Drive with Gravel Soaker

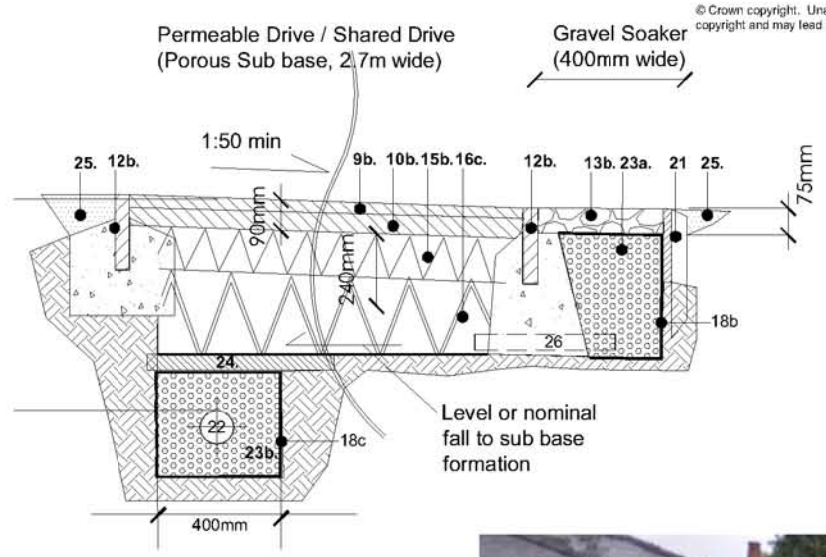

Notes
1) Figured dimensions to be taken. Do not scale dimensions. Contractors must verify all dimensions on site before preparing shop drawings or commencing any work.
2) Copyright © This drawing must not be reproduced without the permission of The Groundwork Trust
3) Reproduced from Ordnance Survey mapping with permission of the controller of HMSO.

© Crown copyright. Unauthorised reproduction infringes Crown copyright and may lead to prosecution or civil proceedings.

Notes:
Works By MCC outside of this contract:

1. Existing Concrete / HRA / DBM road treated to MCC recommendations.

2. Geogrid laid as to MCC recommendations.

3. DBM binder and wearing course to MCC details.

4. New HB2 PCC kerb and hauch to MCC details.

5. Pavement sub base constructed to MCC details.

6. Pavement road base constructed to MCC details.

7. HRA surfacing to pavement with rolled in (red) chippings to MCC details.

8. 250 x 50mm PCC edging kerb with 100mm bed and haunch (or to MCC details where to rear of highways)

Works to DRIVEWAYS & OVER-RUN STRIPS included in this contract:

9. HRA 30 / 14 surface course with 40 / 60 grade binder to PD 6691 Annex C, 40mm thickness.

9b. AC 10 close surface course with 100 / 150 binder to PD 6691 Annex B 30mm thickness.

10a. AC 20 dense binder course with 40 / 60 grade binder to PD 6691 Annex C, 60mm thickness.

10b. AC 20 dense binder course with 100 / 150 bindr to PD 6691 Annex B, 60mm thickness.

11. AC 32 base course with 40 / 60 grade binder to PD 6691 Annex B, 100mm thickness.

12a. 150 x 50mm PCC edging kerb with 150mm GEN / ST2 bed and haunch to restrain tarmac.

12b. 250 x 50mm PCC edging kerb with 100mm GEN1 / ST2 bed and haunch to restrain blockwork.

13. Tobermore Hydropave pedesta, 240 x 120 x 80mm concrete block paving unit, units laiid in a herringbone pattern. Colour - brindle. To be plat:e vibrated after laying and before joint filling. 6.3-2mm grit to be brushed into unit joints to completly fill joints.

13b. 15mm single sized sub angulær hard limestone aggregate depth 75mm

14. Bedding layer - 50mm 6.3-2mm bedding grit.

15. Type 1 granular material rolled and compacted by 6t deadweight roller or vibrating rol ler equivalent:

15a. depth 240mm (where non-por ous)

15b. depth 140mm (where overlaid over porous sub base)

16. Porous sub base - 4/ 20mm we ll compacted permeable aggregate to BS13242:2002:

16a. depth 350mm (under permeab le blockwork / gravel) where CBR is 5% or greate r.

16b. adjustment to pavement design for low CBR:
CBR 1% = +300mm
CBR 2% = +175mm
CBR 3% = +125mm
CBR 4% = +100mm

16c. depth 250mm (under impermeable drive)
16d. depth 75mm under gravel surffacing
16e. depth 280mm (under over-run strips)

17. 6F2 crushed stone / hardcore s ubgrade improvement layer where low CBR :

17a. Driveways (bitmac)
CBR ≤ 2% = 150mm
CBR > 2% = non

17b. Under over-run strips
CBR < 2% = 250mm
CBR 2.0 - 2.5% = 125mm
CBR 2.5 - 3.0% = 100mm
CBR >3.0% = non

18a. Formation to be loosened to assist infiltration.

18b. Geotextile separat ion (300mm overlaps at all joints):Terram 1500 or Polyfelt TS40or similar non woven geotextile, min 2100N CBR puncture resistance / 12.5N tensile strength.

18c. Geotextile filtration (300mm overlaps at all joints to fully wrap filter drains): Terram 1000 or Polyfelt TS20 or similar non woven geotextile, min 1500N CBR puncture resistance / 8N tensile strength.

19. Rigid trims to over-run strips 200 x 100 x 80mm Tobermore pedesta concrete block paving (brindle) unit laid solder (header) course on 150mm concrete bed / 100mm haunch GEN 1 / ST2.

21. 25x150mm pressure treated softwood edge board with 50x50x450 pointed softwood pegs at 1m centres securely fixed with 2no ring shanked galvanised nails

22. Twin walled rib perforated pipe with solid invert and fittings to meet BS 44962 1999 to contractors proposals 100mm diameter designed to a nominal fall of 1:100

23a. Filter drain (no pipe)
23b. Filter drain (below ground piped)

filled with Granular material conforming to BS EN 1610. Material size : 10mm nominal single size or 14 to 5mm graded or

24. 600x600x63mm Fibre reinforced PCC flag paving units spaced at 50mm gaps to protect pipework.

25. Grass edge - reinstate using suitable retained top soil. Settled depth of top soil to grass sed area 15mm above paving, ensuring no trips are formed and concrete haunch adequatley covered.

26 Solid 60mmdiax500mm pipe @ 1m c/s geotextile wrapped passing thru' from porous subbase to drain


Typical Driveway and Parking Bay

F	Dimensions added for clarity	AP	PH	28.9.10
E	Porous sub base depth amended for low CBR	AP	PH	21.7.10
D	Linear drainage / Over-run strip construction amended	AP	PH	28.6.10
C	Linear drainage / Over-run strip construction amended	AP	PH	28.5.10
B	Linear drain amended	AP	PH	13.5.10
A	Block unit size ammended	AP	PH	23.4.10
Rev'd	description	Drawn	Checked	Date

Southway Housing Trust

GROUNDWORK

CHANGING PLACES CHANGING LIVES

Project: Southway Housing Trust Driveway Improvements

Drawing Title: Drive& Over-run Strip Long Section

SCALE	DATE	DRAWING NO.	REV	DRAWN BY	CHECKED BY
1:25 @ A3	30.09.10	1612-022	F	AP	PH

Groundwork in Manchester, Salford, Stockport, Tameside & Trafford.
Timber Wharf, 42-50 Worsley Street, Castlefields Manchester, M15 4LD Tel: 0161 220 1000

Notes
1) Figured dimensions to be taken. Do not scale dimensions. Contractors must verify all dimensions on site before preparing shop drawings or commencing any work.
2) Copyright © This drawing must not be reproduced without the permission of The Groundwork Trust
3) Reproduced from Ordnance Survey mapping with permission of the controller of HMSO.

© Crown copyright. Unauthorised reproduction infringes Crown copyright and may lead to prosecution or civil proceedings.

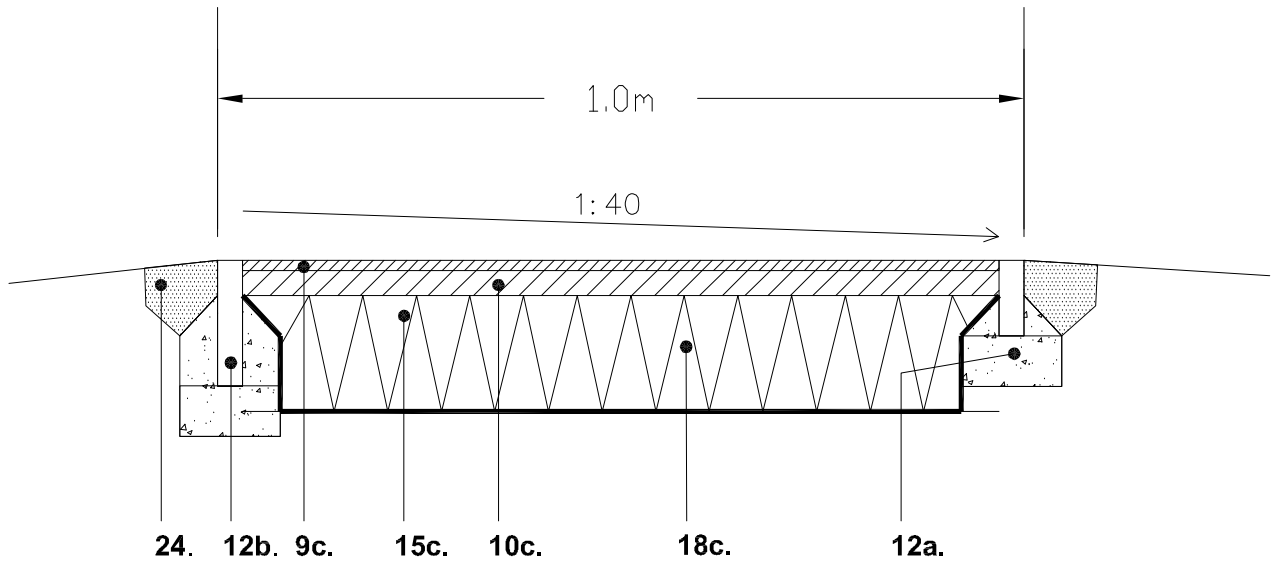

Bitmac Pathway Construction Section

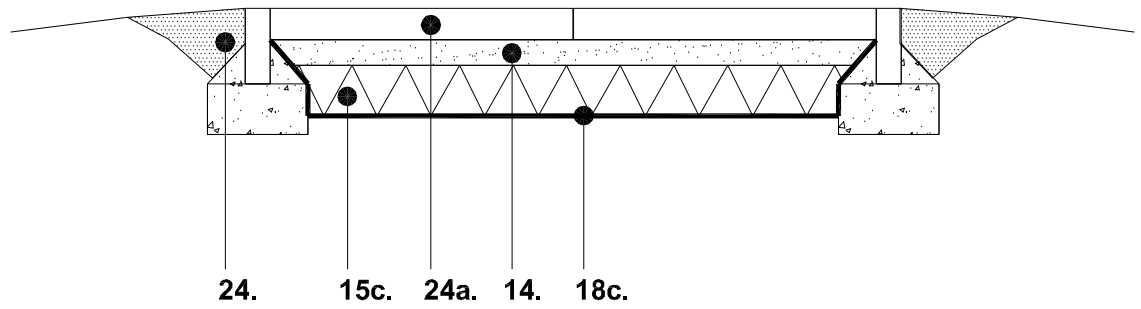

PCC Flag Paving Construction Section

Notes:

9c. AC 6 close surface course with 100 / 150 binder to PD 6691 Annex B 25mm thickness.

10c. AC 20 dense binder course with 40 / 60 grade binder to PD 6691 Annex C, 50mm thickness.

12a. 150 x 50mm PCC edging kerb with 150mm GEN / ST2 bed and haunch to restrain tarmac.

12b. 250 x 50mm PCC edging kerb with 150mm GEN / ST2 bed and haunch to restrain tarmac.

14. Bedding layer - 50mm 6.3-2mm bedding grit.

15. Type 1 granular material rolled and compacted by 6t deadweight roller or vibrating roller equivalent:

15c. depth 230mm.

18c. Terram 1000 Geotextile.

24a. 600 x 900 x 63mm PCC flag paving units, close butt laid with 2/ 3mm dry joints.

25. Reinstate and consolidate suitable clean topsoil 15mm settled depth above path edges and grass seed following completion. Ensure no trip is formed at edges.


Bitmac Path with PCC Edging Kerbs


PCC Flag Paving

rev'd	description	drawn	checked	date
B	Bitmac sub base ammended	AP	PH	

Southway Housing Trust

GROUNDWORK

CHANGING PLACES CHANGING LIVES

Project	Drawing Title
Southway Housing Trust Driveway Improvements	PCC Flag & Bitmac Pedestrian Surfacing

SCALE	DATE	DRAWING NO.	REV	DRAWN BY	CHECKED BY
1:25 @ A3	26.11.10	1612-023	B	AP	PH

Groundwork in Manchester, Salford, Stockport, Tameside & Trafford.
Timber Wharf, 42-50 Worsley Street, Castlefields Manchester, M15 4LD Tel: 0161 220 1000

Notes
1) Figured dimensions to be taken. Do not scale dimensions. Contractors must verify all dimensions on site before preparing shop drawings or commencing any work.
2) Copyright © This drawing must not be reproduced without the permission of The Groundwork Trust
3) Reproduced from Ordnance Survey mapping with permission of the controller of HMSO.

© Crown copyright. Unauthorised reproduction infringes Crown copyright and may lead to prosecution or civil proceedings.

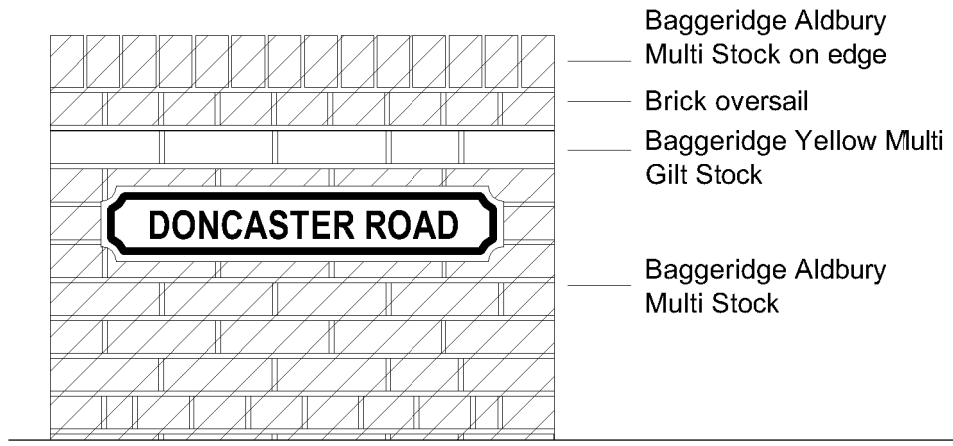

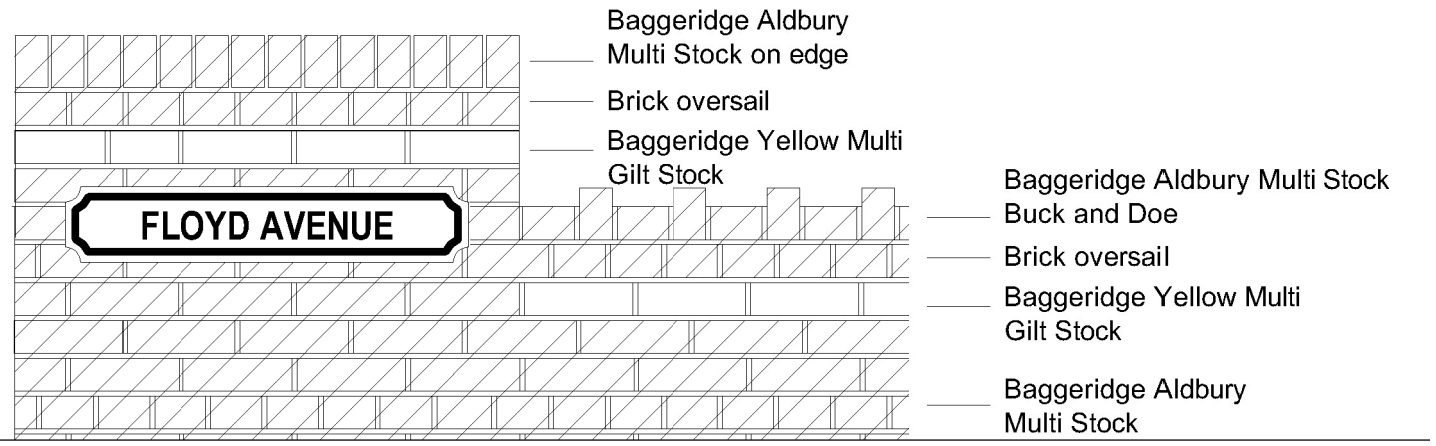

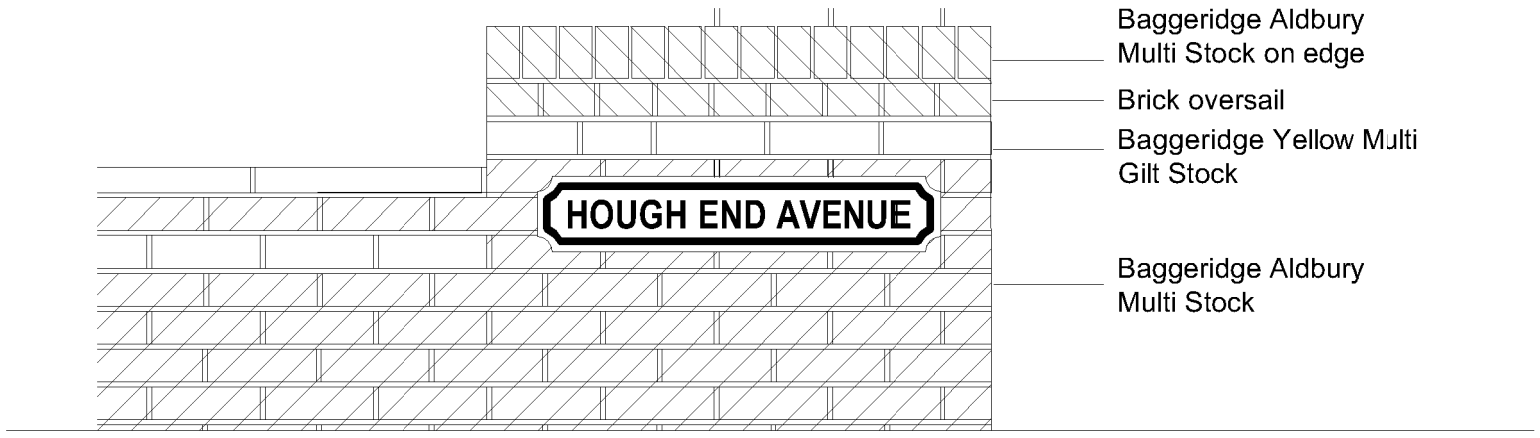

Boundary type no	Height (mm)	Application
4B (i)	800	Strategic gateways / boundaries

Southway Housing Trust

GROUNDWORK

CHANGING PLACES CHANGING LIVES

Project: Southway Housing Trust Driveway Improvements

Drawing Title: Boundary Type No 4B (i) - Name Plate Wall

SCALE	DATE	DRAWING NO.	REV	DRAWN BY	CHECKED BY
1:20 @ A3	30.09.10	1612-050	A	AP	PH

Groundwork in Manchester, Salford, Stockport, Tameside & Trafford.
Timber Wharf, 42-50 Worsley Street, Castlefields Manchester, M15 4LD Tel: 0161 220 1000

Notes
1) Figured dimensions to be taken. Do not scale dimensions. Contractors must verify all dimensions on site before preparing shop drawings or commencing any work.
2) Copyright © This drawing must not be reproduced without the permission of The Groundwork Trust
3) Reproduced from Ordnance Survey mapping with permission of the controller of HMSO.

© Crown copyright. Unauthorised reproduction infringes Crown copyright and may lead to prosecution or civil proceedings.

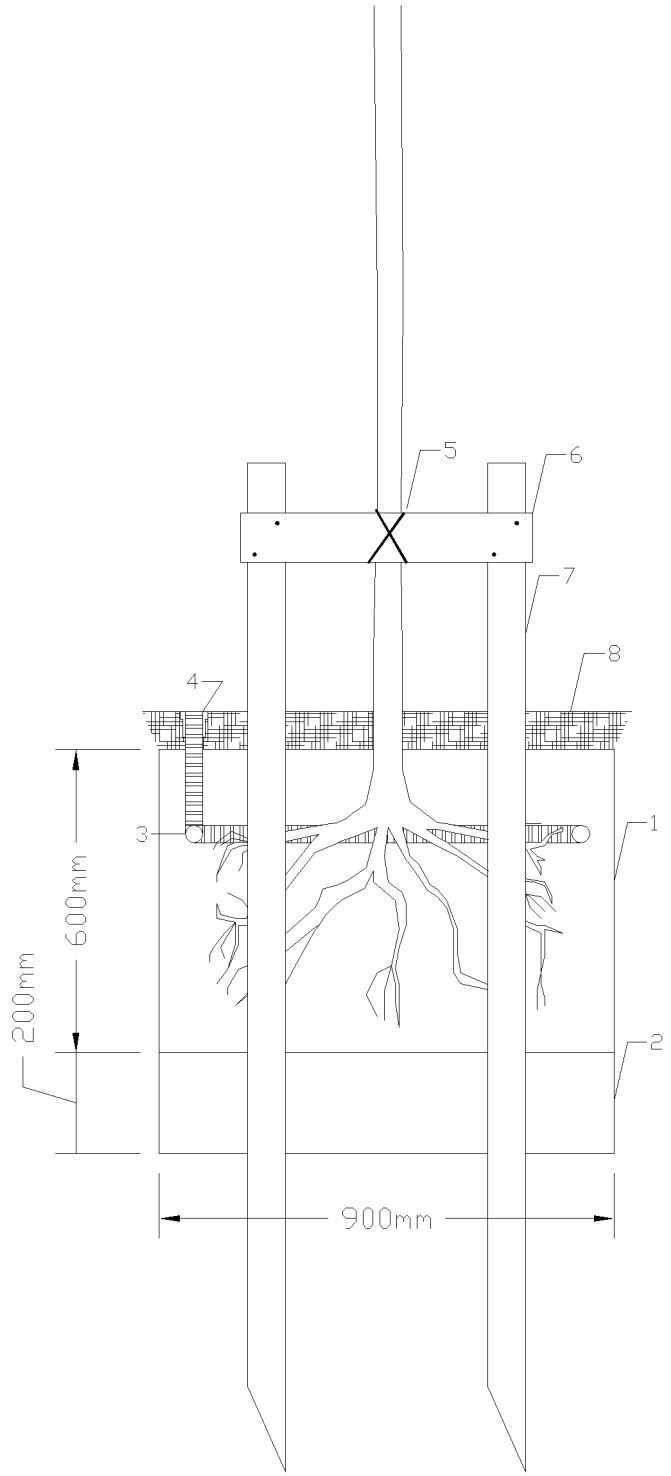

Tree Pit Detail Selected Standard Section

1 Backfill planting pit with 50% by volume approved excavated or imported topsoil mixed with approved tree planting compost; compacting in 200mm layers

2 Bottom of tree pit to be forked over to improve drainage

3 Root Rain Metro (RRPC3) or similar approved installed.

4 Plastic inlet cap to be flush or slightly proud of the finished surface levels

5 Tree to be tied to crossbeam with 'Greenleaf' rubber spacer and tie (spacer between crossbeam and trunk so as to prevent chafing) or similar approved).

6 25x100mm treated timber crossbeam securely nailed to stakes approx. 400mm above ground level

7 2no. 1500mm long peeled larch stakes min. 75mm dia. free from projections. Treated with 'tanalith' (to BS 1282) or similar approved and set approx. 400mm apart

8 Melcourt 'Amenity Bark' or similar approved mulch 50mm thick

Southway Housing Trust

GROUNDWORK

CHANGING PLACES CHANGING LIVES

Project: Southway Housing Trust Driveway Improvements

Drawing Title: Selected Standard Tree Pit Detail

SCALE	DATE	DRAWING NO.	REV	DRAWN BY	CHECKED BY
1:15 @ A3	01.12.10	1612-072	A	AP	PH

Groundwork in Manchester, Salford, Stockport, Tameside & Trafford.
Timber Wharf, 42-50 Worsley Street, Castlefields Manchester, M15 4LD Tel: 0161 220 1000