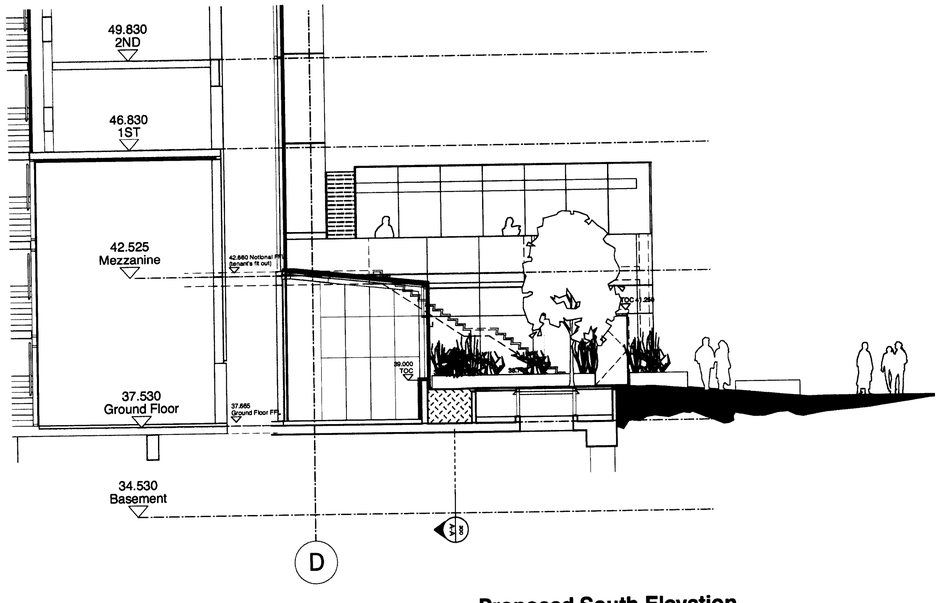

Proposed South Elevation
Scale 1:100

Existing South Elevation
Scale 1:100

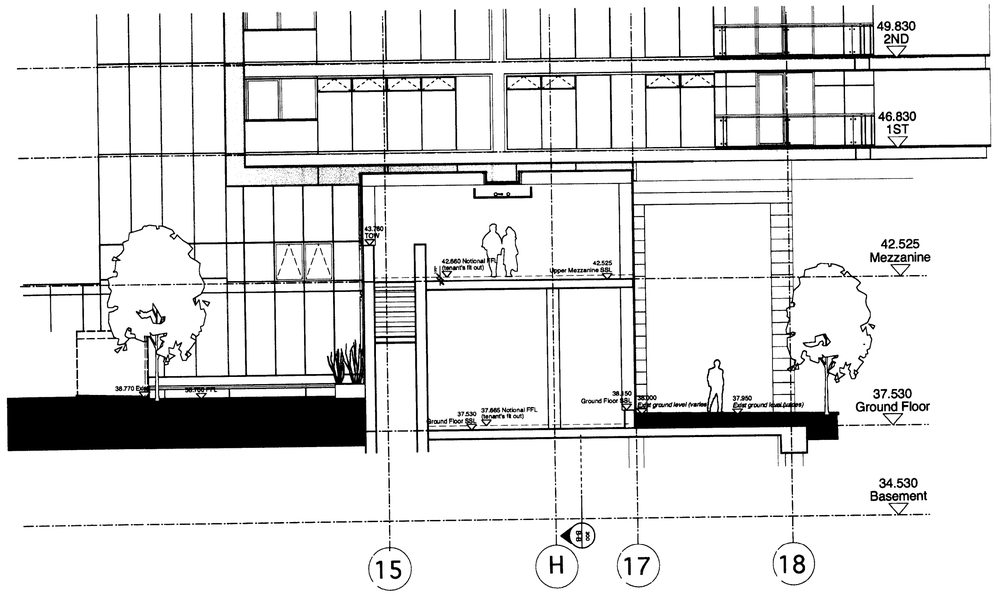

Proposed Cross Section AA
Scale 1:100

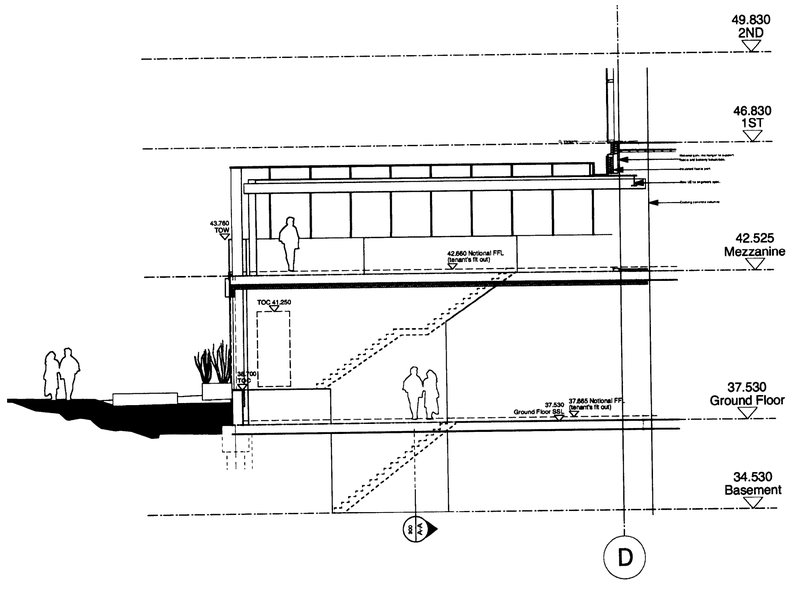

Proposed Cross Section BB
Scale 1:100

All setting out must be checked on site
All levels must be checked on site and refer to Ordnance Datum Newlyn unless alternative Datum given
All dimensions must be checked on site
This drawing must not be scaled
This drawing must not be used for land transfer purposes
Calculated areas in accordance with Assael Architecture's Definition of Areas for Schedule of Areas
This drawing must not be used for construction
Subject to survey, consultation and approval from all statutory Authorities

Revision Status:
P=Planning T=Tender

© 2007 Assael Architecture Limited

Assael Architecture Limited owns the copyright of this design and document which must not be reproduced in whole or part without the written permission of Assael Architecture Limited.

DRAWING NOTES

ELECTRONIC FILE REF N° A2066 200-300 F1

STATUS	REVISION	DATE	DRN	CHK	CDM
P2	PLANNING APPLICATION SUBMISSION	27.03.08	TB	PL	--

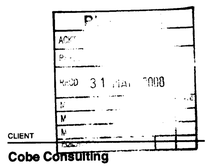

CLIENT
Cobe Consulting

PROJECT TITLE
The Great Northern Tower Mezzanine Extension

DRAWING TITLE
Proposed & Existing South Elevation and Section AA

SCALE @ A1 SIZE	DATE
1:100	July '07
DRAWING N°	STATUS & REVISION
A2066 300	P2

Assael

Assael Architecture Limited
Studio 13
50 Carnwath Road
London SW6 3EG

T +44 (0) 20 7736 7744
F +44 (0) 20 7736 6677
E info@assael.co.uk
W www.assael.co.uk