MAXFAN High Pressure Fan

Section 5.7

- 315mm - 630mm diameter
- Volume flow up to 7.2m³/s
- Static pressures up to 1000 Pa
- High energy efficiency
- All casings are hot dipped galvanised
- Low installed noise levels
- Motor protection IP55
- Overheat protection fitted as standard
- Inverter controllable on 3ϕ
- Speed controllable on 1ϕ and 3ϕ



Sizes

40 MaXfan - 400mm, 45 MaXfan - 450mm, 50 MaXfan - 500mm, 56 MaXfan - 560mm, 63 MaXfan - 630mm.

Fan Performance

All fans are tested to the latest internationally recognised standard IS05801 1997, installation category D for aerodynamic performance and BS848 Part 2 (1985) for acoustic performance.

Impellers

A unique high efficiency aerofoil section blade with a purposely smoothed hub and clamp plate for adjustable pitch angle availability.

The Fläkt Woods impellers are all high pressure die cast to offer thin aerofoil sections for low generation of noise. Every cast aluminium component is X-ray examined using Real Time Radiography prior to assembly.

Motors

All motors are totally enclosed air stream rated class F insulation. Constructed from aluminium as standard with special 'T' slot or pad mounted fixings. Motors are suitable for speed control.

Suitable for horizontal through to vertical shaft operation. Supplied IP55, with removable drain plugs.

Sealed for life bearings lubricated with wide temperature range grease.
Motors are fitted with thermostat overheat protection as standard.
Three phase motors are suitable for inverter speed control down to 20% of full speed.

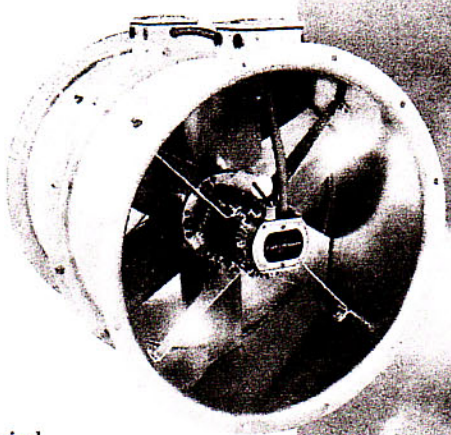

Electrical Supply

220 - 240V / 50Hz / 1ϕ
380 - 420V / 50Hz / 3ϕ

Temperature Range

-40°C to 50°C as standard. (All motors are not suitable for starting at temperatures lower than -20°C.) Fans that include BT or CT motors can be continuously operated at temperatures up to 70°C.
When these fans are operating in excess of 50°C they should be run at full speed only.
Other fans can be operated up to 70°C with appropriate deration of motors.

Casings

MaXfans are available fully cased, complete with an externally mounted pre-wired electrical terminal box.

Casings are spun from sheet steel with integral pre-drilled and radiused inlet flanges.
The galvanised finish gives a high resistance to corrosion and is ideal for external as well as internal use.

Accessories

Silencers, Mounting feet, Vibration isolators, Matching flanges, Flexible connectors, Air operated non return dampers, Guards, Bell mouth inlets.

FläktWoods

Performance Data

Product Code	Speed rev/min	m^3/s at Pa (Static)								
		0	100	200	300	400	500 *	600	800	1000
40 MaXfan	1420	1.7	1.5	1.35	1.2					
45 MaXfan	1420	2.1	2.0	1.8	1.6	1.3				
50 MaXfan	1420	2.6	2.4	2.3	2.1	1.7	1.6			
56 MaXfan	1420	3.7	3.5	3.3	3.1	2.8	2.5	2.1		
63 MaXfan	1440	7.2	7	6.8	6.6	6.4	6.3	6.0	5.5	4.9

Electrical Data

Product Code	Speed rev/min	Motor	220-240V/50Hz/1φ						Sound Level dBA
			Product Number	Motor Rating [kW]	Full Load Current (at 230V) [A]	Starting Current (at 230V) [A]	Wiring Diagram Ref	†Speed Controller	
40 MaXfan	1420	BT9	EQ411452	0.64	4.4	10	CD1705	ME1.8	63
45 MaXfan	1420	CT5	EQ481486	0.78	5.8	11.2	CD1705	ME1.8	64
50 MaXfan	1420	CT5	EQ511486	1.04	7.8	15.6	CD1705	ME1.8	67
56 MaXfan	1420	CT8	EQ571459	1.84	13.4	27	CD1705	ME1.12	73

Product Code	Speed rev/min	Motor	380-420V/50Hz/3φ						Sound Level dBA
			Product Number	Motor Rating [kW]	Full Load Current (at 400V) [A]	Starting Current (at 400V) [A]	Wiring Diagram Ref	†Speed Controller	
63 MaXfan	1440	PM112	EQ561405	8.8	18.6	110	CD1343	FWD7	80

Sound pressure levels quoted are average dBA at 3m distance over a sphere, under free field conditions and are presented for comparative purposes only.

Motor rating, full load and starting current data is per fan set.

† Speed controllers sized one per set fan.

Fans that include BT or CT motors can be continuously operated at temperatures up to 70°C.

When these fans are operating in excess of 50°C they should be run at full speed only.

Wiring diagram references can be found in section 9.2.

Please refer to our Fläkt Woods inverter & speed control warranty clause on page 226.

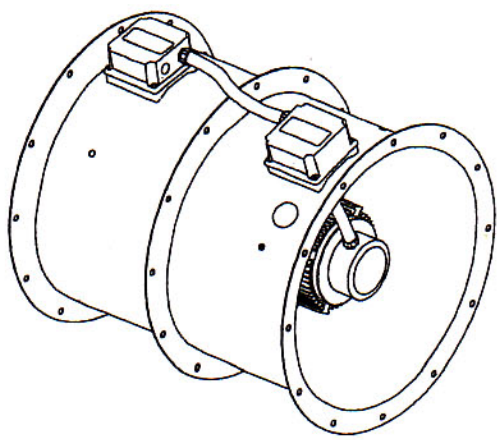

Express Range	-	**These products are available from our UK Express Distributor on same day delivery from the date of order.**
Standard Service	-	Please consult your local distributor for availability maximum 15 days.

EXPRESS RANGE

www.flaktwoods.com/express

Dimensions

Long Cased

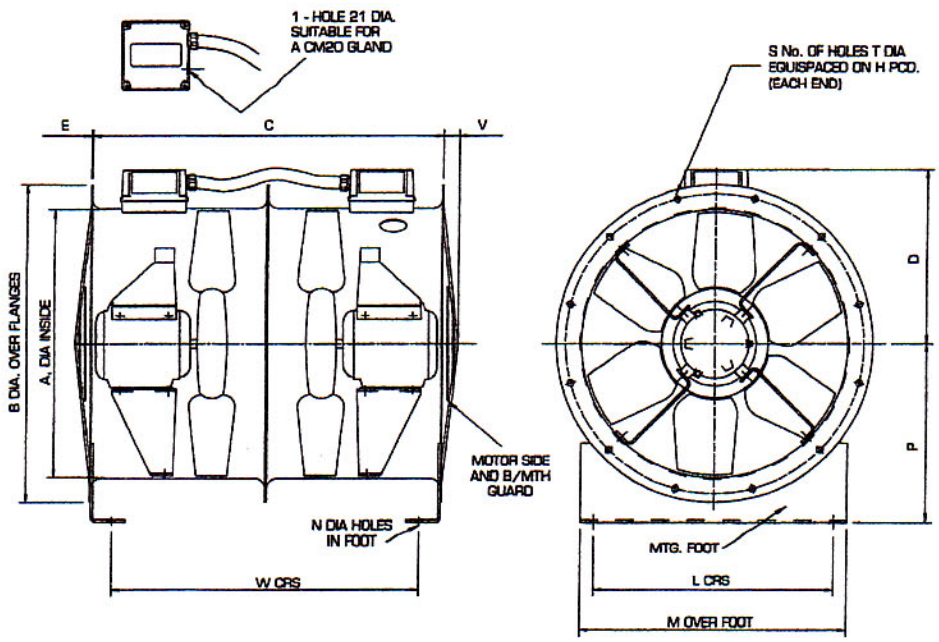

Product Code	Motor	A	B	C	D	E	H	L	M	N	P	S	T	V	W	Weight (kg)
40 MaXfan	BT9	400	480	750	279	2.5	450	350	400	10	250	8	12	30	660	44
45 MaXfan	CT5	450	530	660	306	2	500	400	450	10	280	8	12	30	571	44
50 MaXfan	CT5	500	584	660	338	2	560	450	500	10	315	12	12	30	561	52
56 MaXfan	CT11	560	654	750	338	2.5	620	510	560	10	355	12	12	50	650	68
63 MaXfan	PM112	630	724	1040	403	3	690	580	630	10	400	12	12	50	954	155

All dimensions shown in mm.

For a full range of accessories including silencers, speed controllers and mountings, please refer to section 5.10 or 9.1 (which shows all accessories).