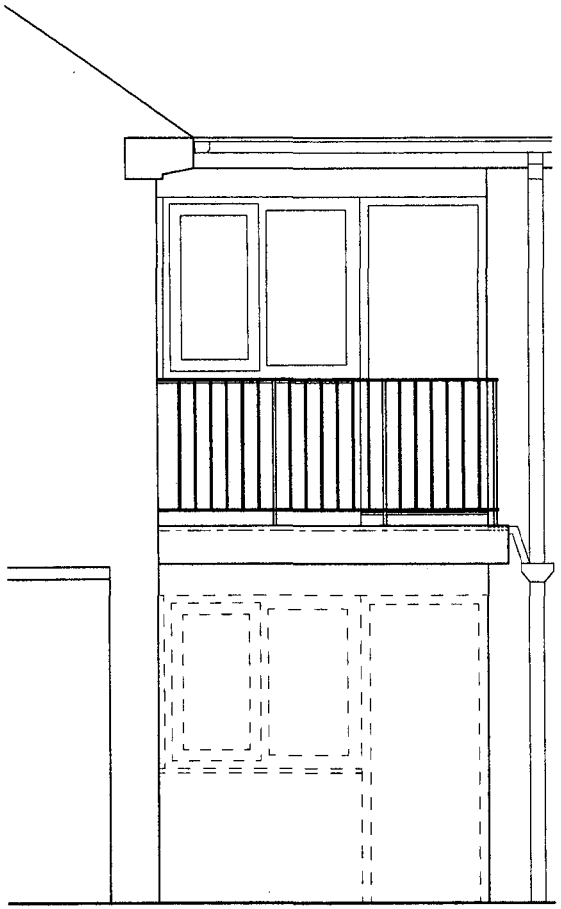

Elevation

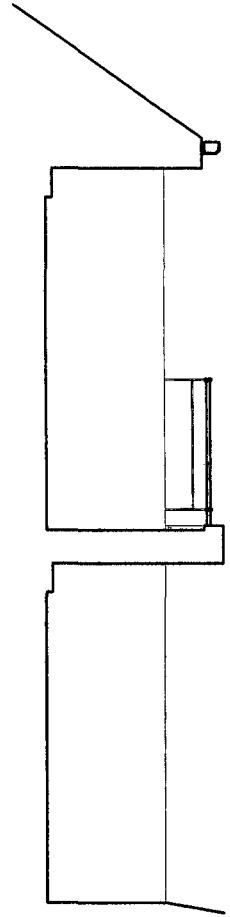

Section A-A

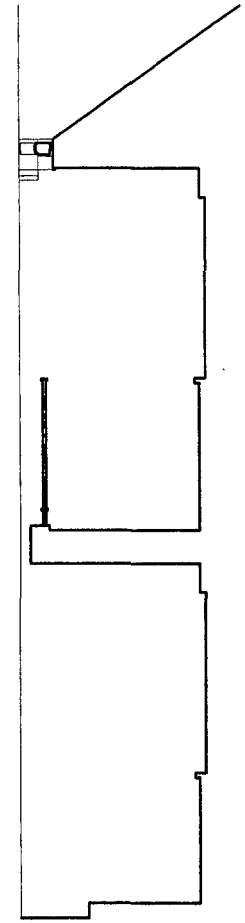

Section B-B

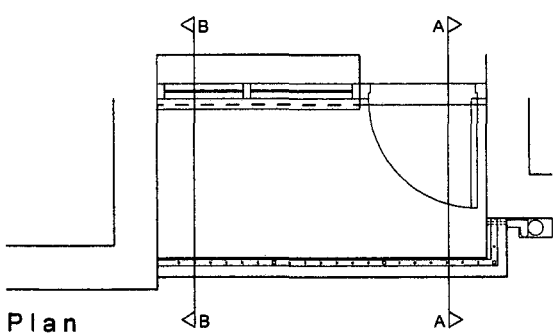


Plan

Do not scale from this drawing.
All dimensions to be checked on site by contractor prior to construction.

| Client | Description | | | Job No | 2437 |
|---|---|---|---|---|---|
| Willow Park Housing Trust | Plan, Sections and Elevation as Existing | | | Drg No | 02 |
| Job | Drawn | Date | Scale | Rev. | - |
| Cottage Flat Improvements | CD | 28/11/2011 | 1:50 | | |

**Bernard Taylor Partnership Ltd.**
**Architects**
ELIZABETH HOUSE, 486 DIDSBURY ROAD, HEATON MERSEY
STOCKPORT, CHESHIRE, SK4 3BS
Tel: 0161-443 1221
Fax: 0161-442 1672
E-mail: Info@BernardTaylor.co.uk