KEY:

Figures in PCU's
AM (PM)

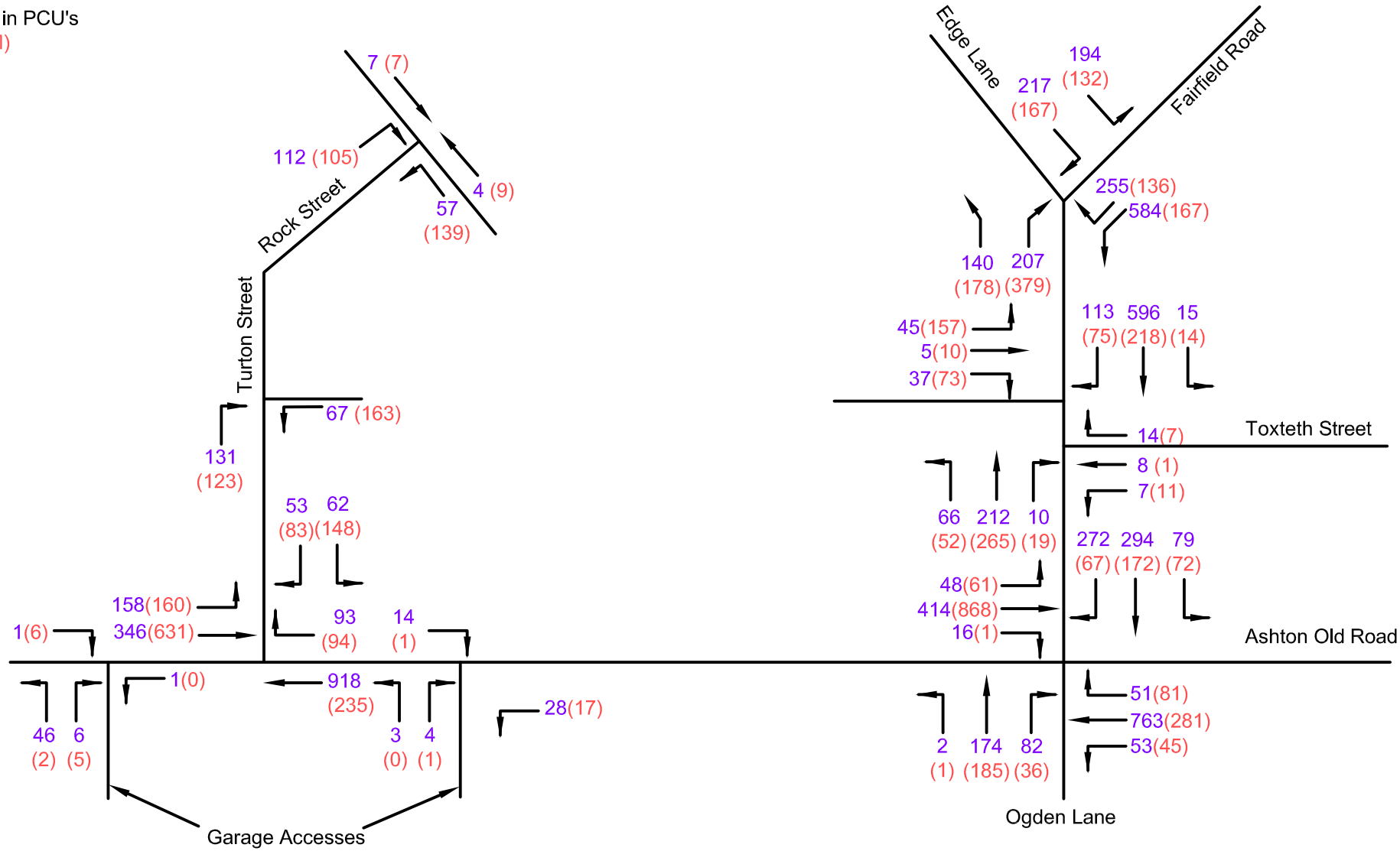

SCALE	DATE	Assessment Flows Development Trips and Existing + Committed Traffic	Figure 6.6
NTS	4.8.06		
LOCATION: F:\TProj.\38864\CAD\ReportFigure\Figure6_6.dwg			