OT-1-125





OT-1-200





Application

The portable exhaust extractor is applied for capturing the exhaust fumes emitted by vehicle exhaust pipe during engine tests, adjustments and diagnostics. The extractor should be placed with its suction tube close to the exhaust pipe. Exhaust fumes are further transported outside the room through a hose attached to the fan outlet.

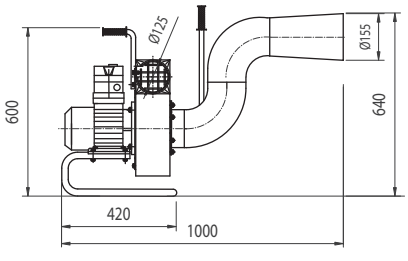

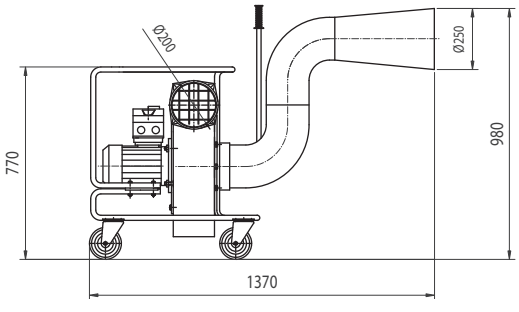

Structure

The extractor consists of radial fan, rotary suction tube and frame. The suction tube can be easily settled at a convenient position according to exhaust pipe. Portable exhaust extractor is applied for personal cars and pickups. This version is equipped with a frame for easy displacement. Mobile exhaust extractor is designed for lorries and it is equipped with castor wheels fixed to the frame. The motor is equipped with a motor protective switch with short-circuit and overload protection. It is important to attach a hose to the fan outlet to discharge the exhaust volume outside the room.

TECHNICAL DATA

Type	Part №	Volume flow [m^3/h]	Supply voltage [V]	Motor rate [kW]	Weight [kg]
OT-1-125	803O10	500	230	0,37	25
OT-1-200	803O11	2000	230	1,1	48

HOSES

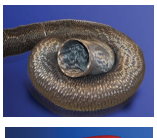



Type	Part №	Diameter [mm]	Thermal resistance [°C]	Sold in maximum section length [m]	Remarks
ST/CL-125 ST/CL-200	363P64 363P66	125 200	120	20	is not crush recoverable
G-EX1-125 G-EX1-200	428P61 428P63	125 200	150 (intermittent up to 200)	10	crush recoverable