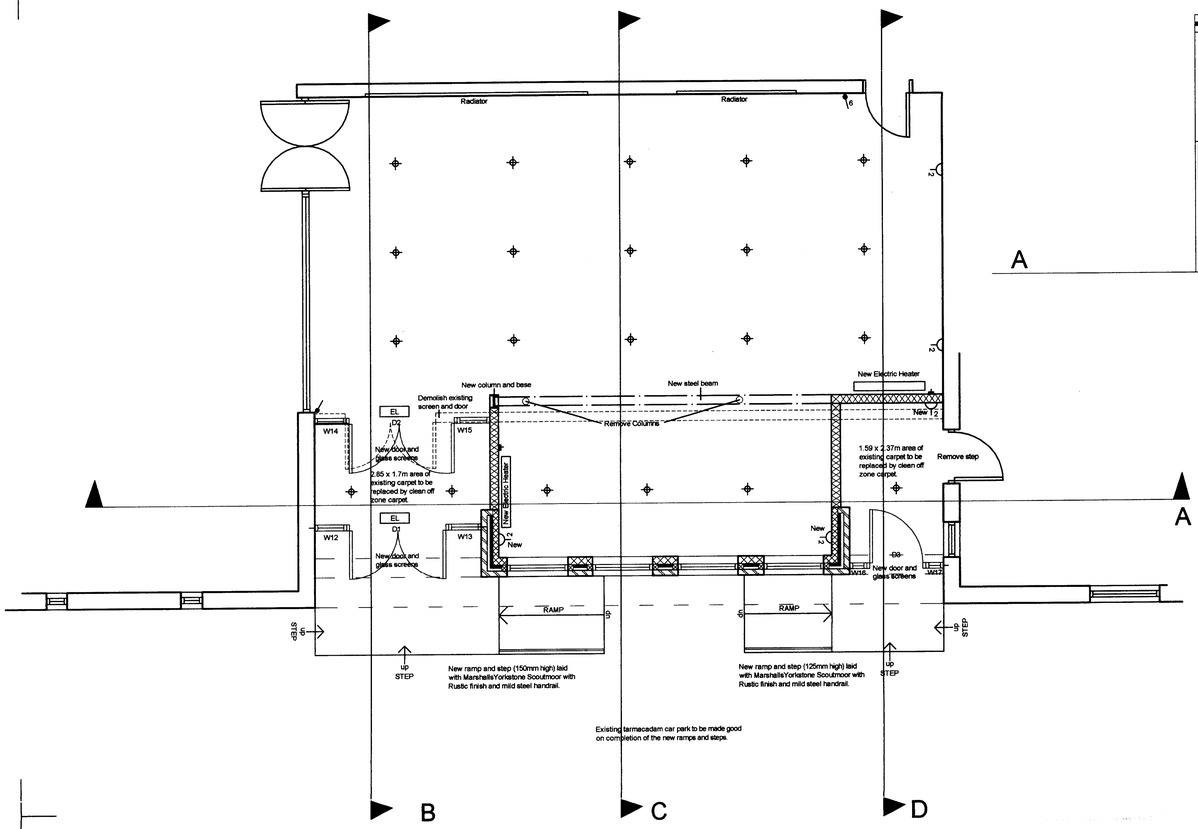

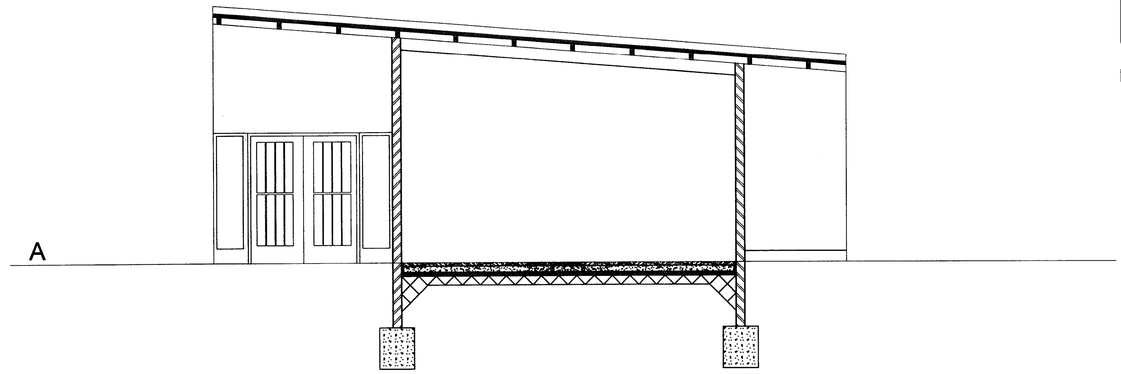

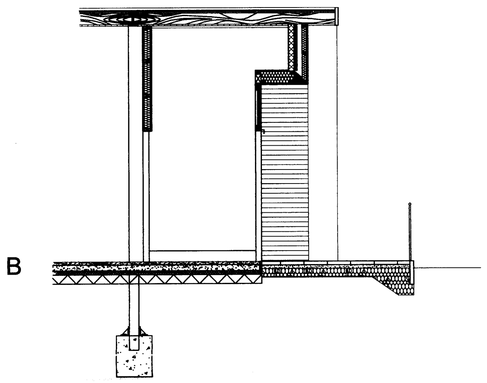

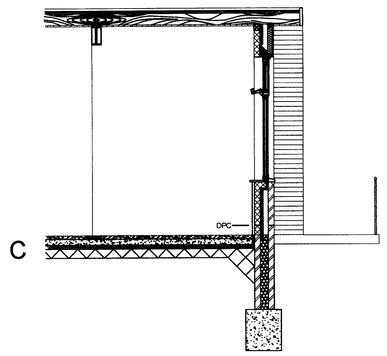

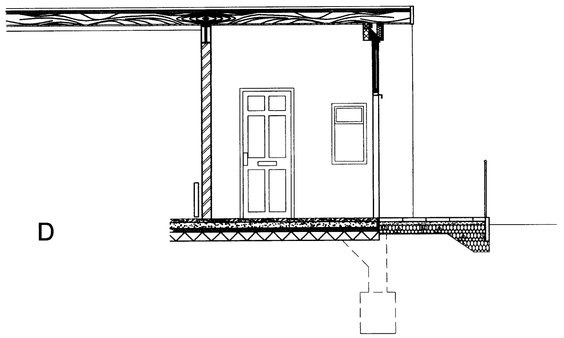

Copyright of this drawing is vested in the Architect and it must not be copied or reproduced without consent. Figured dimensions only are to be taken from this drawing. All contractors must visit the site and be responsible for taking and checking all dimensions relative to their work. Hulme Upright Manning to be advised of any variation between drawings and site conditions.
DO NOT SCALE OFF THIS DRAWING.....IF IN DOUBT ASK

Rev.	Drawn	Comments	Date
A	SH	Altered all drawings due to inconsistances in previous set.	10/08

GENERAL SPECIFICATION

FOUNDATIONS

1. 700x250mm traditional strip foundation 1100mm below Ground Level, C35 Mix on suitable ground bearing to LA Building Control requirements.

FLOOR

1. 60mm cement sand screed on 100mm reinforced concrete floor slab on 60mm Kingspan K8 floor insulation on visqueen 1200 DPM on 150mm compacted hardcore. New Coral Classic clean off carpet to entrance lobbies.

2. Exterior ramps and steps to be formed using Marshalls Yorkstone 'Scoutmoor'.

WALLS

1. New cavity wall to comprise of outer leaf 102.5 facing brickwork to match existing, 90mm cavity with 40mm Thermawall (Kingspan) insulation fixed to 100mm thick Plasmor Aglite Blockwork, to be constructed to create new external boundary to the meeting room.

2. Hardwood PTG V1S (125x25mm) timber cladding with 1 No. coat Cetol HLS followed by 2 No. coats Cetol THB/Filter 7. to be used for new facade above window headers.

STRUCTURE

1. Remove existing columns and install new steel I beam and column as shown to support existing structure alone.

FINISHES & FITTINGS

1. Walls finished internally using 13mm Gypsum Hardwall plaster and skim with primer and 2 coats Emulsion paint finish.

2. Remove existing floor finishes and replace with new carpet throughout.

3. Re-paint existing internal walls with 2 coats Matt Emulsion paint.

4. New 125x19mm softwood skirtings fitted to internal walls, primed to receive 1 undercoat and 1 coat gloss paint.

5. 6 No. downlighters to match existing and 2 No. Emergency Lighting above exit doors.

6. 2 No. electrical heaters with 13A fused spurs.

7. 3 No. twin socket outlets as shown.

PLANNING
13 NOV 2008
FOR ACTION

HULME UPRIGHT MANNING
ARCHITECTS TOWN PLANNERS INTERIOR DESIGNERS

Barclay House
35 Whitworth Street West
Manchester
M1 5NG

LEEK
MANCHESTER
STOKE-ON-TRENT

Tel: 0161-237 1767
Fax: 0161-237 1757

Email - manc@hum-arch.co.uk
Website - www.hulmeupright.co.uk

Client
Shrewsbury RC Diocese

Project
Scheme for Extension
Sacred Heart & Saint Peter's RC Church, Baguley

Title
Proposed Plan and Sections

Status

Date	Sept 2008	Drawn	SH
Scale	1:50	Checked	
Job Ref.	M0653	Drawing No.	[04]
		Revision	A