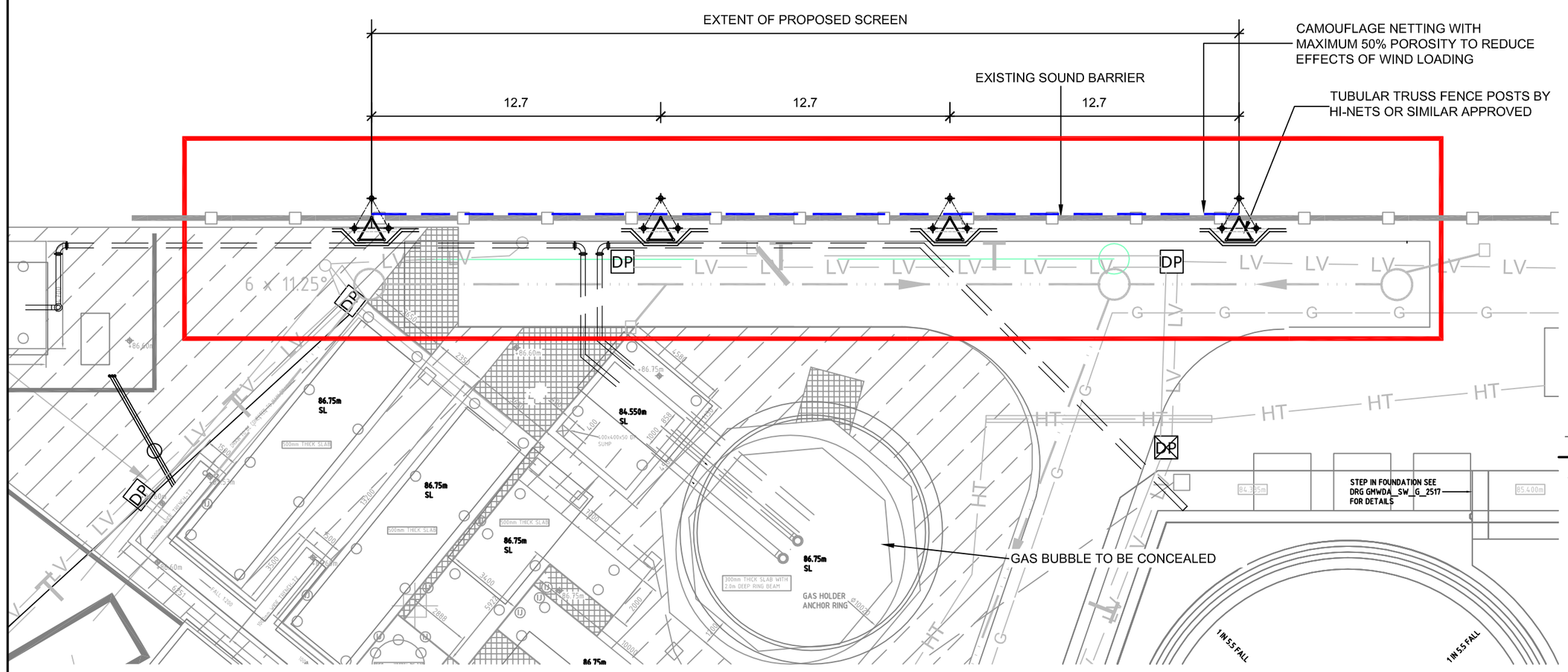

VISUAL SCREEN LOCATION PLAN
SCALE 1:200

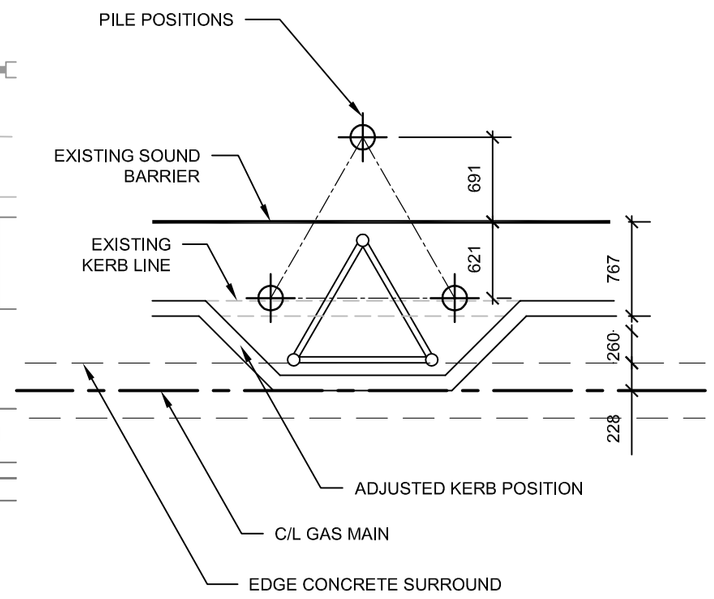

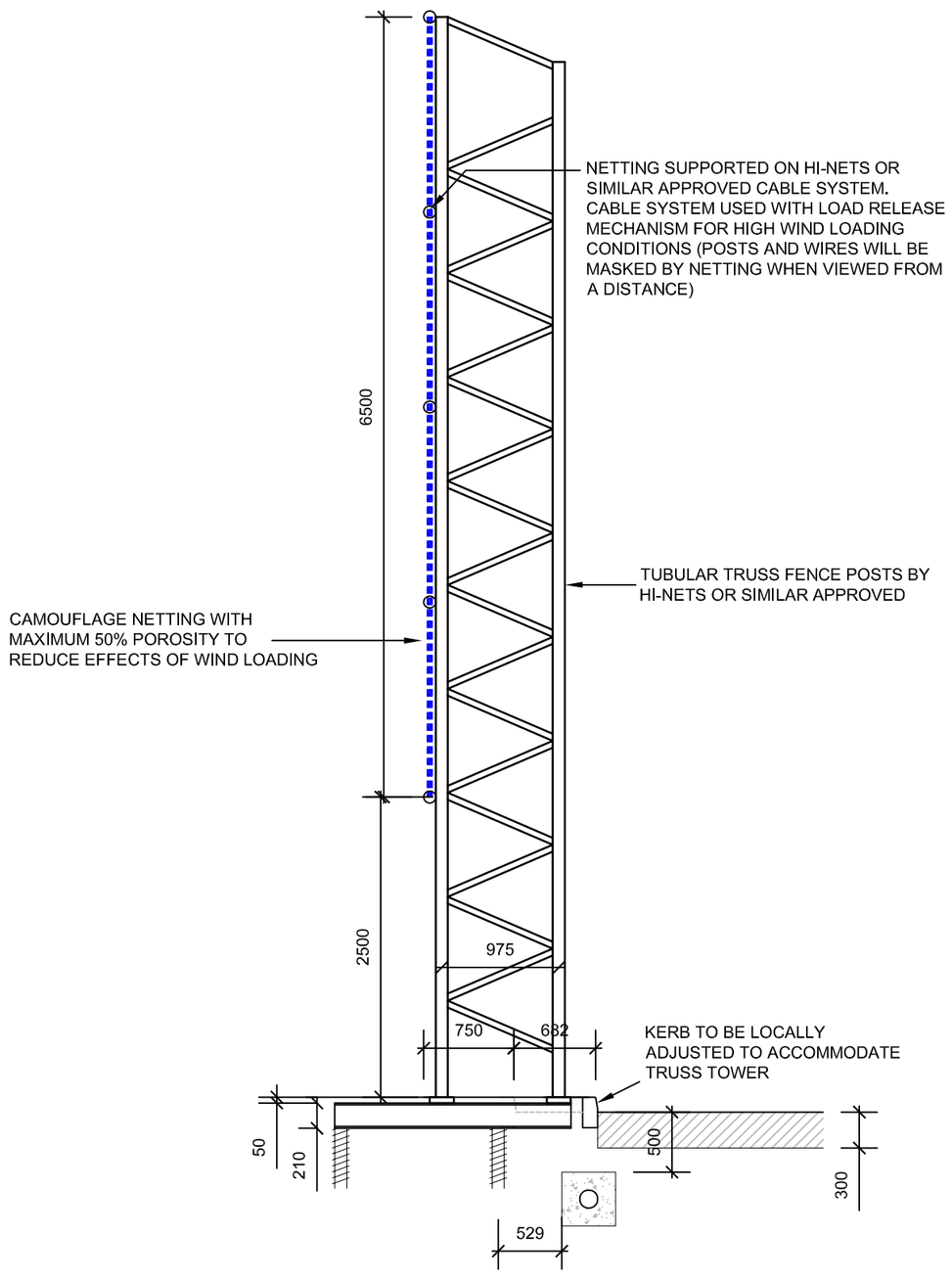

TYPICAL SECTION THROUGH VISUAL SCREEN
SCALE 1:50

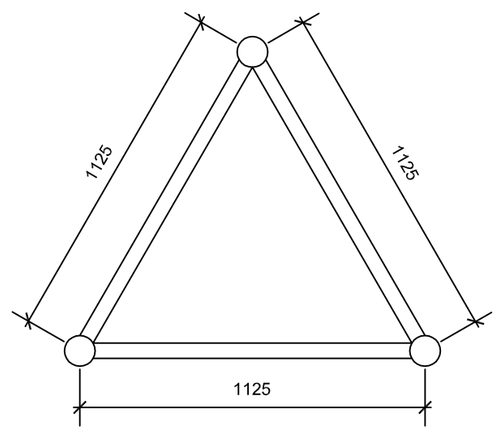

PLAN ON TRUSS
SCALE 1:20

TYPICAL ELEVATION ON VISUAL SCREEN
SCALE 1:50

©Copyright Reserved

DO NOT SCALE FROM THIS DRAWING

NOTES

1. BASE PLAN FROM DRAWING GMWDA-SW-G-4012 REVISION C1, DATED 24/09/10.
2. ALL DIMENSIONS IN MILLIMETERS.
3. THIS DRAWING IS TO BE READ IN CONJUNCTION WITH ALL OTHER RELEVANT ENGINEERS / ARCHITECTS / SPECIALIST DRAWINGS.
4. ANY DISCREPANCIES IN THE DETAILS SHOWN ON THIS DRAWING TO BE REPORTED TO ENGINEER PRIOR TO CONSTRUCTION.
5. ALL STEELWORK TO BE GRADE S275.
6. ALL BOLTS TO BE GRADE 8.8.
7. STEELWORK TO BE BLAST CLEANED TO GRADE SA2 1/2 (ACCORDING TO BS EN ISO 8501-1) WITH A ZINC RICH EPOXY PRIMER APPLIED TO A NOMINAL DRY THICKNESS OF 40µm. STEELWORK IS THEN TO BE FINISHED WITH A HIGH BUILD EPOXY M10 FINISH APPLIED TO A NOMINAL DRY THICKNESS OF 100µm TO PROVIDE A 15-20 YEAR LIFE SPAN. ALTERNATIVELY STEELWORK TO BE GALVANISED TO BS EN ISO 1461, MEAN COATING THICKNESS (MINIMUM) TO BE 85 MICRONS.

REFERENCE

- APPLICATION BOUNDARY
- ROUTE OF GAS MAIN AS INDICATED ON SITE
- EXISTING ACOUSTIC FENCE
- SCREENING FENCE
- PILE

REVISION	DETAILS	DATE	DRAWN	CHK'D	APP'D
B	Application Boundary Amended.	30/01/13	JV	TF	MD
A	First Issue	23/08/12	JV	TF	RK

CLIENT
Viridor Waste Management Limited

PROJECT
North Manchester Resource Recovery Facility
Reliance Street, Manchester
Visual Screening

DRAWING TITLE
Proposed Visual Screen

DRG No.	SCALE	DATE
LE11555-003	AS SHOWN @ A2	23/08/12

DRAWN BY	CHECKED BY	APPROVED BY
JV	TF	MD

☐ STOKE-ON-TRENT (HEAD OFFICE)	TEL 0845 111 7777	☐ CARDIFF	TEL 029 2072 9191
☐ NEWCASTLE UPON TYNE	TEL 0191 232 0943	■ LEIGH	TEL 01942 260101
☐ WEST BROMWICH	TEL 0121 580 0909	☐ SHEFFIELD	TEL 0114 245 6244
☐ LONDON	TEL 020 7287 2872	☐ EDINBURGH	TEL 0131 555 3311
		☐ LIVERPOOL	TEL 0151 494 5431

wardell armstrong — your earth our world