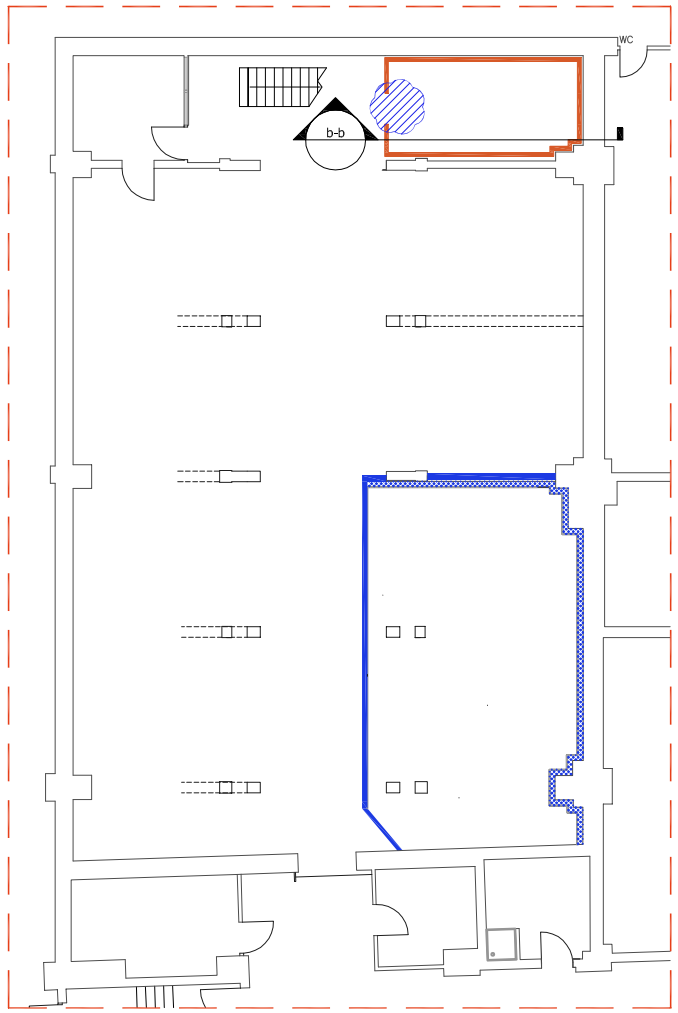

1 Proposed Partitions Layout
Scale: 1:200

Supply and install new standard (or similarly approved) Polyisocyanurate (PIR) modular partitioning panels to locations as shown. Supply and install panels only after removal of adjacent affected services (refer to DSSR Dwgs). Allow for neatly dressing into all abutments. Allow for ceiling detail as shown on section drawing 5087-071-005 to the same specification as above. Allow for full supply and install in full accordance with manufacturers recommendations. Allow for any preparation works deemed to be required by partition manufacturer. Allow for sliding door and vision panels to partition as shown.

Supply and install new soundproof stud partition system to locations as shown. Consisting of 100mm x 75mm studs fixed @ 300 centres and back to back for extra rigidity. Pack tightly with 2 x 50mm sound control solutions (SCS) (or similarly approved). R50 insulation batts. Screw fix 2 x 25mm soft tone insulation boards fixed in full accordance with manufacturers recommendations. 12mm timber batten to create void and finished in 15mm Gyproc (or similarly approved) plasterboard. Tape & fill all joints in readiness to receive decoration.
Sound Control Solutions: 01664 444471

Supply and install new Sound-Service Ltd (or similarly approved) high performance acoustic doorset. Door to be hung in new partition to vibrophone room. Door to be 64mm thick with sound reduction value of 44DB. Allow for supply of door and frame fully complete, including frame, lining, seals etc. Door to have 1 vision panel as shown below.
Sound Service Ltd. 0845 363 7131.

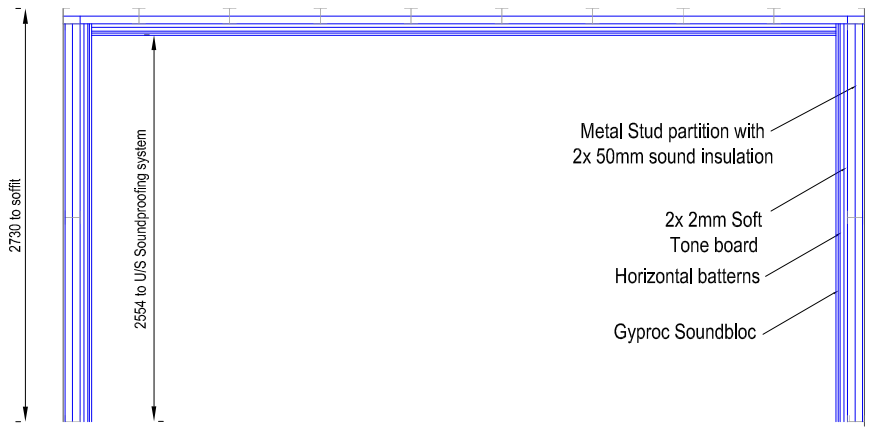

b-b Section b-b Vibrophone Room
Scale: 1:50

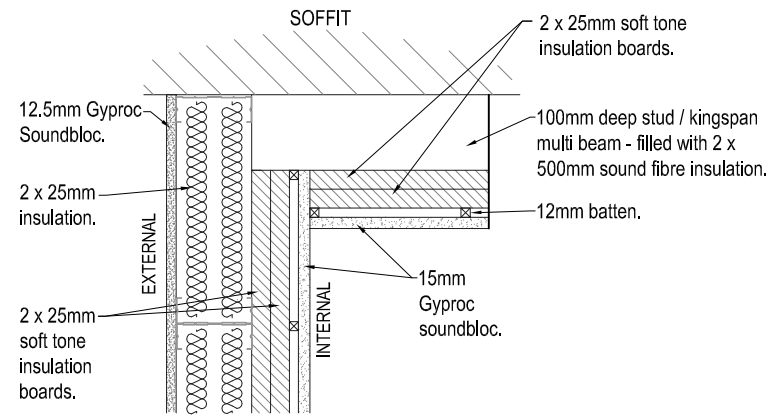

2 Ceiling Connection Detail (Vibrophore Room).
Scale: 1:10

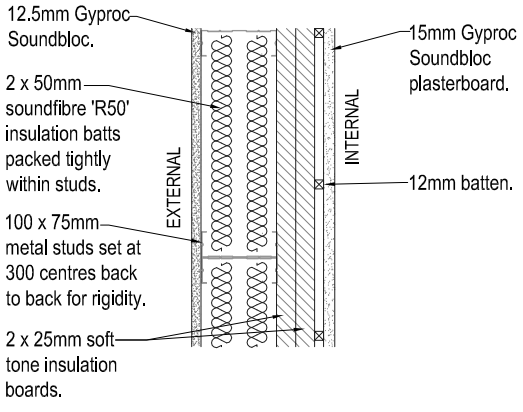

3 Indicative Soundproof Partition detail (Vibrophore Room)
Scale: 1:10

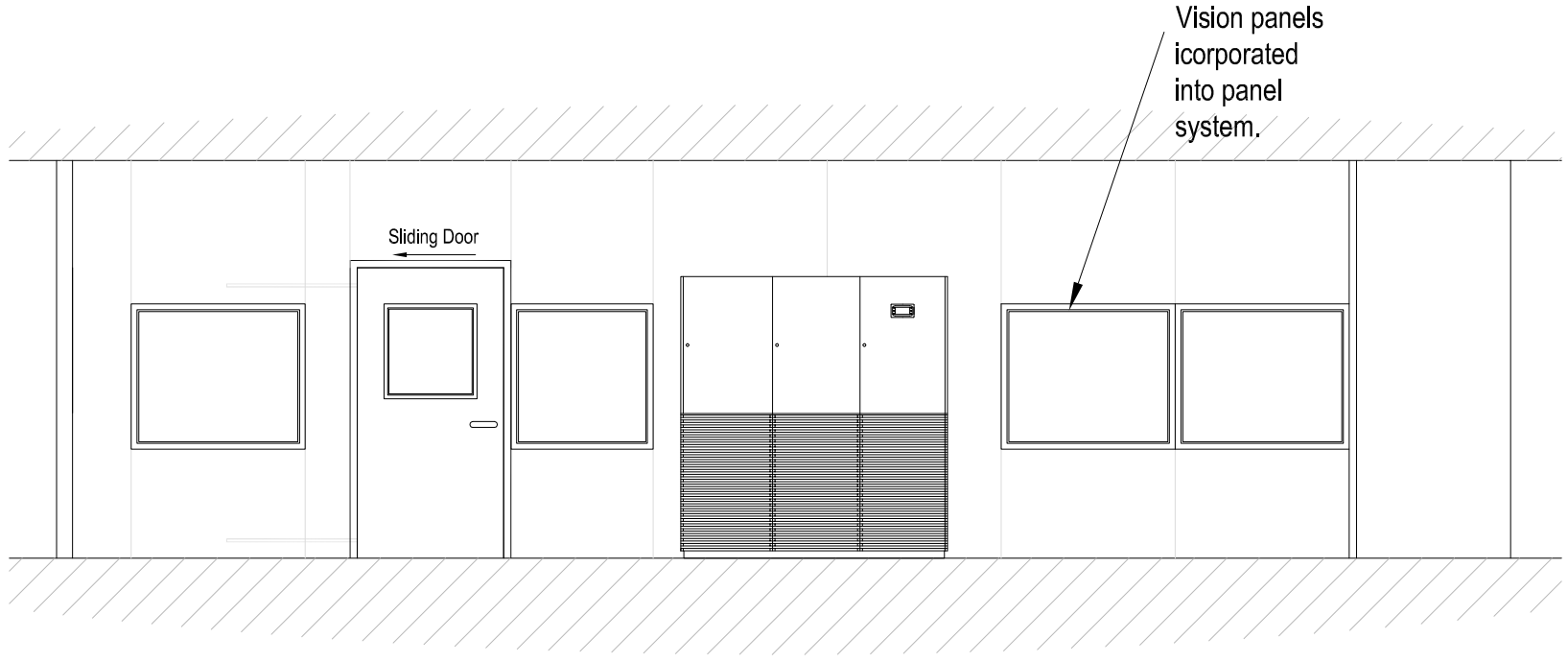

4 Indicative Proposed PIR panel partition Elevation
Scale: 1:50

RLB|Rider Levett Bucknall

DO NOT SCALE THIS DRAWING, CHECK ALL DIMENSIONS ON SITE

This drawing is to be read in conjunction with all relevant specifications and drawings issued. For discrepencies or ommissions contact Rider Levett Bucknall.
The contractor is to check and verify all building and site dimensions and check levels before work commences
© Rider Levett Bucknall UK Limited.

This drawing is to be read in strict accordance with the Schedule of Works & associated documents.

CONTRACTOR NOTE
Temperature controlled room to operate with the tolerance not to exceed +/- 2°C.

A.	Chiller Unit Location	TG
Date:	Revision:	Dr:

Client: University of Manchester

Drawing Issue: TENDER

Project: Dalton Nuclear Lab
Sackville Building

Drawing Title: Proposed Partitions

Scale:	Drawing Nr:		
as stated @ A3	5086-071-004		
Revision:	Drawn:	Authorised by:	Date:
A	HC	SB	AUG 12

Drawing Ref: 5086-071-004

8 Exchange Quay
Salford Quays
Manchester
United kingdom
M5 3EJ
Tel : +44 (0)161 868 7700
Fax : +44 (0)161 868 7701
Email :
WEB : www.rlb.com

RLB|Rider Levett Bucknall

Drawing Nr: 5086-071-004
Drawing Title: Proposed Partitions
Project: Dalton Nuclear Lab
Client: University of Manchester